A-1C-200

HUSKY

Parts Catalog

307.885.3151 OR AVIATAIRCRAFT.COM

AVIAT AIRCRAFT INC.

HUSKY ★ PITTS ★ EAGLE Box 1240 Afton, Wyoming 83110

Copyright ©2008 Aviat Aircraft, Inc. All rights reserved. This book is protected by copyright. No part of this book may be reproduced in any form or for any means, including photocopying, or utilized by any information storage and retrieval systems without written permission from the copyright owner. The authors and publisher have made every effort to provide an accurate reference text. However, they shall not be held responsible for problems arising from errors or omissions, or from misunderstandings on the part of the reader.

Figure 1 - Wing Spar Assembly, A-1C 200

ITEM	PART NUMBER	CODE NUMBER	DESCRIPTION	LEFT WING	RIGHT WING	TOTAL QTY	SERIAL EFFECTIVITY
1	35122-501		Front Spar Assembly, LH	1		1	
	35122-502		Front Spar Assembly, RH		1	1	
2							
3	35119-001		Spar, Wing Front LH	1		1	
	35119-002		Spar, Wing Front RH		1	1	
4	37123-001		Spar, Wing Rear LH	1		1	
	37123-002		Spar, Wing Rear RH		1	1	
5		81230	Strut, Drag No. 1	1	1	2	
6		81280	Strut, Drag No. 2, 3	2	2	4	
7	37518-003		Drag Strut, Lower 'N'	1	1	2	
8	37518-002		Drag Strut, Upper 'N'	1	1	2	
9		81290	Tube, 'N'	1	1	2	
10		81300	Drag Strut, No. 5	1	1	2	
11		81255	Drag Brace Tube	1	1	2	
12		81240	Fitting, Front Wing Attach	2	2	4	
13	35544-004		Angle, No. 1 Drag Strut Reinf'mt	1	1	2	
14		81235	Plate, Lock	10	10	20	
15		51709	Bolt, undrilled			12	
16		62670	Rivet, Cherry			12	
17	30146-030		Washer	1	1	2	
18	37550-001		Fitting, Rear Wing Attach	2	2	4	
19		81260	Fitting, Drag Wire	4	4	8	
20		51721	Bolt, undrilled			2	
21		52336	Bolt, undrilled			16	
22		50126	Bolt, undrilled			8	
23		50426	Bolt, undrilled			12	
24	35140-502		Flap Hinge Bracket Assembly	3	3	6	
25		58850	Washer, Large Area			20	
26		55392	Nut, self-locking			84	
27		58790	Washer			32	
28		55450	Nut, self-locking			16	
29		50026	Bolt, undrilled			38	
30		58740	Washer			86	
31	35544-007		Angle, Spar Reinforcing	1	1	2	
32	35548-001		Angle, Spar Reinforcing	1	1	2	
33	35548-003		Angle, Spar Reinforcing LH	1		1	
33	35548-004		Angle, Spar Reinforcing RH		1	1	
34	35544-006		Angle, Spar Reinforcing	1	1	2	
35	35544-002		Angle, Spar Reinforcing	1	1	2	
36	35544-005		Angle, Spar Reinforcing	1	1	2	
37	35544-003		Angle, Spar Reinforcing	1	1	2	
38	35231-001		Plate, Spar Reinforcing	1	1	2	
39	30646-501		Bracket Assembly, Aileron Bellcrank	1	1	2	
40	35248-001		Bracket, Flap Spring Attach	1	1	2	
41		81195	Block, Filler - Rr Spar	1	1	2	
42		81190	Block, Filler - Frt Spar	1	1	2	
43	35562-001		Fitting, Jury Strut	2	2	4	
44		81340	Fitting, Drag Stru;t	3	3	6	

Figure 1 - Wing Spar Assembly, A-1C 200

45		81335	Fitting, Drag Wire	2	2	4	
46		81350	Wire, Drag	4	4	8	
47		81345	Wire, Drag	2	2	4	
48	45150-501		Aileron Hinge Bracket Assembly	2	2	4	
49		51725	Bolt, undrilled	4	4	8	
50	37552-001		Filler Block	2	2	4	
51	37554-001		Lift Strut Attach Fitting, Rear	2	2	4	
52		81370	Filler Block	2	2	4	
53	37555-001		Lift Strut Attach Fitting, Front	2	2	4	
54							
55							
56	35219-001		Bracket, Aileron Pulley LH	1		1	
56	35219-002		Bracket, Aileron Pulley RH		1	1	
57	35547-002		Fitting, Spacer	1	1	2	
58		81355	Fitting, Spacer	1	1	2	
59		51717	Bolt, undrilled	2	2	4	
60		58780	Washer	8	8	16	
61		55425	Nut, self-locking	8	8	16	
62	35223-001		Bracket, Fairlead Attach LH	1		1	
62	35223-002		Bracket, Fairlead Attach RH		1	1	
63		55611	Anchor Nut, Miniture	2	2	4	
64		62662	Rivet, pull-stem	4	4	8	
65		62668	Rivet, pull-stem	4	4	8	
66		81270	Nipple	12	12	24	
67		81265	Washer, Square	12	12	24	
68		81275	Clevis	12	12	24	
69	35121-001		Angle, Spar Reinforcing	2	2	4	
70		56512	Rivet	19	19	38	
71	35235-001		Plate, Spar Reinforcing	3	3	6	
72	35544-001		Angle, Spar Reinforcing	1	1	2	
73	30504-097		Bushing, Primed	3	3	6	
74	37519-001		Lock Plate	2	2	4	
75							
76		50126	Bolt, undrilled	3	3	6	
77		51723	Bolt, undrilled	6	6	12	

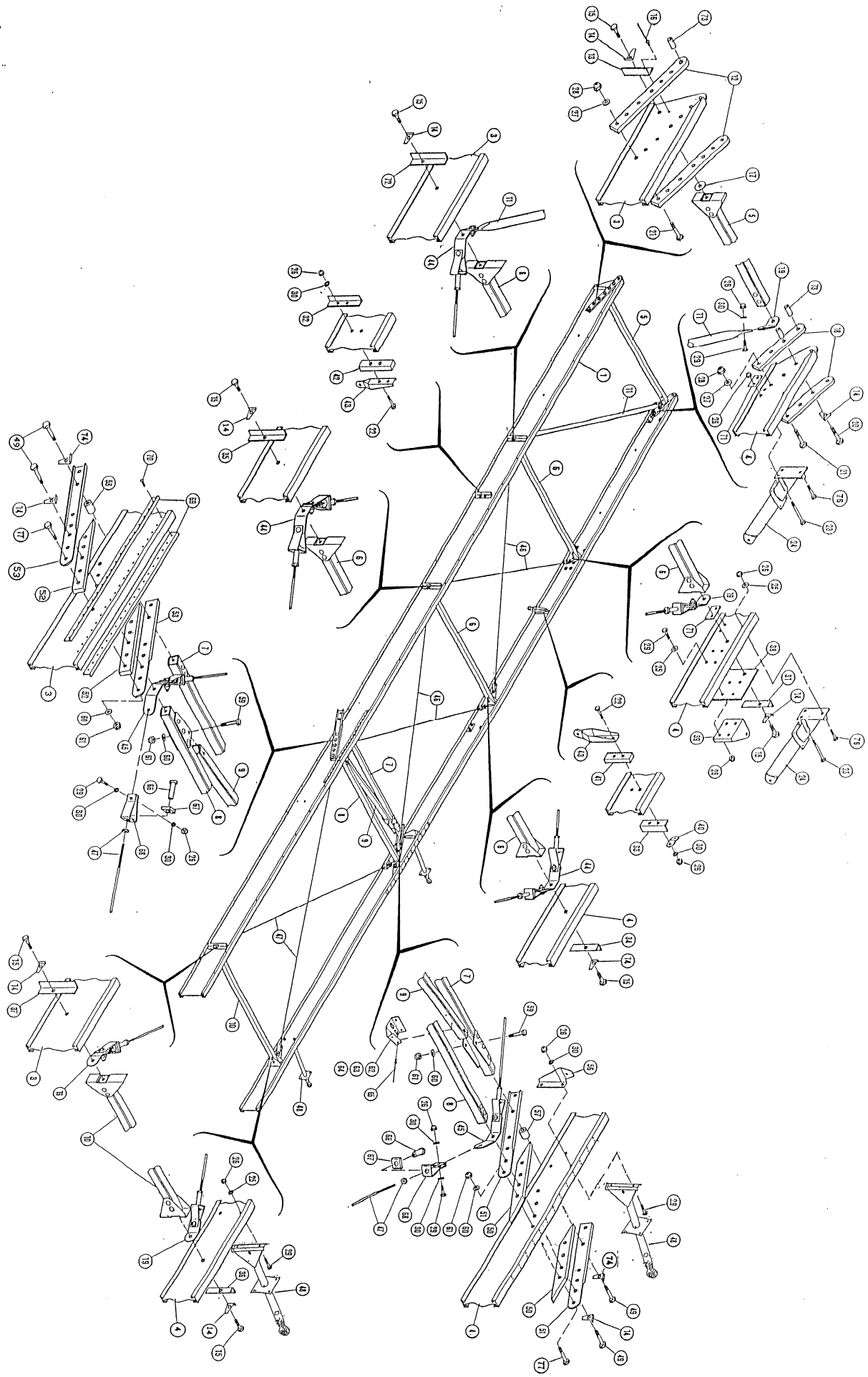

FIGURE 1: WING SPAR ASSEMBLY

FIGURE 2 - Wing Assembly, A-1C 200

ITEM	PART NUMBER	CODE NUMBER	DESCRIPTION	LH	RH	TOTAL QTY	SERIAL EFFECTIVITY
	45190-501		Wing Assembly, Uncovered (left wing)	1		1	
	45190-502		Wing Assembly, Uncovered (right wing)		1	1	
1	35185-001		Rib, Wing Nose (left wing)	1		2	
	35185-002		Rib, Wing Nose (right wing)		1	1	
2	35011-002		Rib, Wing Nose (left wing)	1		1	
	35011-001		Rib;, Wing Nose (right wing)		1	1	
3	35186-001		Rib, Wing Nose (left wing)	1			
	35186-002		Rib;, Wing Nose (right wing)		1	1	
4	35011-002		Rib, Wing Nose (right wing only)		1	1	
5	35011-002		Rib, Wing Nose (both wings)	1	1	2	
6	35011-001		Rib, Wing Nose (left wing)	25		25	
	35011-002		Rib, Wing Nose (right wing)		26	26	
7	35180-001		Rib, Wing Center (left wing)	1		1	
	35180-002		Rib;, Wing Center (right wing)		1	1	
8	35181-001		Rib, Wing Center (left wing)	1		1	
	35181-002		Rib;, Wing Center (right wing)		1	1	
9	35182-001		Rib, Wing Center (left wing)	1		1	
	35182-002		Rib;, Wing Center (right wing)		1	1	
10	35183-001		Rib, Wing Center (left wing)	1		1	
	35183-002		Rib;, Wing Center (right wing)		1	1	
11	35285-001		Rib, Wing Center (left wing)	1		1	
	35285-002		Rib;, Wing Center (right wing)		1	1	
12	35012-001		Rib, Wing Center (left wing)	5		5	
	35012-002		Rib;, Wing Center (right wing)		5	5	
13	35012-002		Rib;, Wing Center (right wing)	3		3	
	35012-001		Rib, Wing Center (left wing)		3	3	
14	35012-002		Rib, Wing Center (left wing)	1		1	
	35012-001		Rib, Wing Center (right wing		1	1	
15	35187-001		Rib, Trailing Edge (left wing)	1		1	
	35187-002		Rib, Trailing Edge (right wing)		1	1	
16	35014-001		Rib, Trailing Edge (left wing)	10	2	12	
	35014-002		Rib, Trailing Edge (right wing)	2	10	12	
17	35014-002		Rib, Trailing Edge (left wing)	1		1	
	34014-001		Rib, Trailing Edge (right wing)		1	1	
18	35014-003		Rib, Trailing Edge (left wing)	1		1	
	35014-004		Rib, Trailing Edge (right wing)		1	1	
19	35184-001		Rib, Wing Center	1			
	35184-002		Rib, Wing Center		1		
20	45015-001		Rib, Trailing Edge - ail. well (right wing)	2		2	
	45015-002		Rib, Trailing Edge - ail. well (left wing)		2	2	
21	45015-002		Rib, Trailing Edge - ail. well (right wing)		4	4	
22	35013-003		Rib, Trailing Edge - (left wing tip)	1		1	
	35013-002		Rib, Trailing Edge - (right wing tip)		1	1	
23	35155-001		Angle, L.E. Attach (top to spar at tank)	1	1	2	
	35155-002		Angle, L.E. Attach (Bot to spar at Tank)	1	1	2	
24	35155-023		Angle, Leading Edge Attach (top to spar)	1	1	2	
	35155-024		Angle, Leading Edge Attach (Bot to spar)	1	1	2	
25	35155-003		Angle, Leading Edge Attach (top to spar)	1	1	2	
	35155-025		Angle, L.E. Attach (Bot to spar LH)	1		1	

FIGURE 2 - Wing Assembly, A-1C 200

	35155-026		Angle, L.E. Attach (Bot to Spar RH)		1	1	
26	35155-005		Angle, Leading Edge Attach (top to spar)	1	1	2	
	35155-006		Angle, Leading Edge Attach (Bot to spar)	1	1	2	
27	35155-007		Angle, Leading Edge Attach (top to spar)	1	1	2	
	35155-008		Angle, Leading Edge Attach (Bot to spar)	1	1	2	
28	35155-027		Angle, Leading Edge Attach (top to spar)	1	1	2	
	35155-028		Angle, Leading Edge Attach (Bot to spar)	1	1	2	
29	35155-009		Angle, Leading Edge Attach (top to spar)	1	1	2	
	35155-010		Angle, Leading Edge Attach (Bot to spar)	1	1	2	
30	35155-003		Angle, Leading Edge Attach (top to spar)	1	1	2	
	35155-004		Angle, Leading Edge Attach (Bot to spar)	1	1	2	
31	35155-011		Angle, Leading Edge Attach (top to spar)	1	1	2	
	35155-012		Angle, Leading Edge Attach (Bot to spar)	1	1	2	
32	35155-013		Angle, Leading Edge Attach (top to spar)	1	1	2	
	35155-014		Angle, Leading Edge Attach (Bot to spar)	1	1	2	
33	35155-015		Angle, Leading Edge Attach (top to spar)	1	1	2	
	35155-016		Angle, Leading Edge Attach (Bot to spar)	1	1	2	
34	35155-017		Angle, Leading Edge Attach (top to spar)	1	1	2	
	35155-018		Angle, Leading Edge Attach (Bot to spar)	1	1	2	
35	35155-019		Angle, Leading Edge Attach (top to spar)	1	1	2	
	35155-020		Angle, Leading Edge Attach (Bot to spar)	1	1	2	
36	35155-021		Angle, L.E. Attach (top to spar at tank)	1	1	2	
	35155-022		Angle, L.E. Attach (Bot to spar at Tank)	1	1	2	
37	35162-001		Cover, Fuel Tank Fabric Support	1	1	2	
38	35177-001		Cover, Wing Rib (upper)	1	1	2	
39	35126-001		Cover, Wing Rib (lower)	1	1	2	
40	35287-002		Panel, Rectangular	1	1	2	
41	35160-004		Cover, Flap Cove (inboard left wing)	1		1	
	35160-005		Cover, Flap Cove (inboard right wing)		1	1	
42	35244-001		Cover, Flap Cove (middle both wings)	1	1	2	
43	35161-003		Cover, Flap Cove (outboard left wing)	1		1	
	35161-004		Cover, Flap Cove (outboard right wing)		1	1	
44	35159-002		Trailing Edge, Flap Cove	1	1	2	
45	35287-001		Panel, Rectangular	1	1	2	
46	45156-001		Cover, Aileron Cove	1	1	2	
47	45144-001		Bracket, Ail. Cove Attach LH	1		1	Modified from 45015-001
	45144-002		Bracket, Ail. Cove Attach RH		1	1	Modified from 45015-002
48	35286-001		Cover, Wing Rib	1	1	2	
49	35286-002		Cover, Wing Rib	1	1	2	
50	35170-001		Leading Edge, Wing	1	1	2	
51	35170-002		Leading Edge, Wing	1	1	2	
52	35170-003		Leading Edge, Wing (left wing)	1		1	
	35170-004		Leading Edge, Wing (right wing)		1	1	
53	35170-006		Leading Edge, Wing	1	1	2	
54	35170-005		Leading Edge, Wing (left wing)	1		1	
	35170-009		Leading Edge - Left Wing with Access Hole for Heated Pitot Only (optional)		OPT	1	OPTIONAL
	35170-008		Leading Edge, Wing (right wing)		1	1	
	35170-010		Leading Edge, Right Wing w/Landing/Flying Light (optional)	OPT		1	OPTIONAL
55	35171-001		Channel, Butt Rib Reinforcing	1	1	2	

FIGURE 2 - Wing Assembly, A-1C 200

56	35172-001		Channel, Butt Rib Reinforcing (left wing)	1		1	
	35172-002		Channel, Butt Rib Reinforcing (right wing)		1	1	
57		62668	Rivet, Blind Open End	1545	1545	3090	
58		81390	Brace, Channel -	4	4	8	
59		62671	Rivet, Cherry:	8	8	16	
60		56438	Rivet, Univ. Hd	12	12	24	
61		81420	Angle, Rib Reinforcing (left wing)	5	5	10	
		81425	Angle, Rib Reinforcing (right wing)	5	5	10	
62		81425	Angle, Rib Reinforcing (left wing)	2	2	4	
		81420	Angle, Rib Reinforcing (right wing)	2	2	4	
63	35143-001		Angle, Rib Reinforcing	2	2	4	
64		81410	Angle, Rib Reinforcing (left wing)	5	5	10	
		81415	Angle, Rib Reinforcing (right wing)	5	5	10	
65		81415	Angle, Rib Reinforcing (left wing)	2	2	4	
		81410	Angle, Rib Reinforcing (right wing)	2	2	4	
66		56505	Rivet, Univ. Hd.	8	8	16	
67		55617	Anchor Nut	39	39	78	
68		62662	Rivet, Pull-Stem, Rivet	78	78	156	
69	35151-001		Plate, Root Rib	1	1	2	
70	35542-001		Stiffener, Leading Edge	1	1	2	
71	35543-001		Reinforcement, Rib	1	1	2	

FIGURE 2 WING ASSEMBLY

FIGURE 3 - Wing Installation, A-1C 200

ITEM	PART NUMBER	CODE NUMBER	DESCRIPTION	LH	RH	TOTAL QTY	Serial Eff.
1	45408-501		Wing Assembly, Covered (left wing)	1		1	
			(incl. Fuel tank and finish colors)				
	45408-502		Wing Assembly, Covered (right wing)		1	1	
			(incl. Fuel tank and finish colors)				
2	45169-501		Flap Assembly, Covered LH - Extended (w/o bearings)	1		1	
	45169-502		Flap Assembly, Covered RH - Extended (w/o bearings)		1	1	
3	45154-501		Aileron Assembly, Covered LH	1		1	
	45154-502		Aileron Assembly, Covered RH		1	1	
4		51723	Bolt, undrilled (rear)	1	1	2	
		51725	Bolt, undrilled (front)	1	1	2	
5		58780	Washer	4	4	8	
6		55425	Nut, self-locking	4	4	8	
7		50101	Bolt (inboard aileron)	1	1	2	
		50076	Bolt (outboard aileron)	1	1	2	
		50076	Bolt (all flaps)	3	3	6	
7(a)		82050	2 in. Reflective Tape, red/white			AR	
7(b)		82155	Foam Tube, 1-1/4 long	3	3	6	
8		58740	Washer	9	9	18	
9		55601	Nut, self-locking	9	9	18	
10		51719	Bolt, undrilled	1	1	2	
11		51951	Bolt, undrilled	1	1	2	
12		52290	Bolt, undrilled	2	2	4	
13		58794	Washer, thin	2	2	4	
14		55425	Nut, self-locking	2	2	4	
15	35412-501		Strap Assembly, Jury Strut	1	1	2	
16		81675	Clamp, Jury Strut	2	2	4	
17	35267-001		Brace, Wing Strut	1	1	2	
18	35410-001		Jury Strut, Front	1	1	2	
19	35411-001		Jury Strut, Rear	1	1	2	
20	35260-501		Front Wing Strut Assembly	1	1	2	
21	35291-501		Rear Wing Strut Assembly	1	1	2	
22		50151	Bolt, undrilled	2	2	4	
23		60026	Bolt, undrilled	2	2	4	
24		81680	Bracket, Pulley Guard	1	1	2	
25	35430-001		Ring, Tie-down	1	1	2	
26		81355	Spacer, Strut Fitting	1	1	2	
27		81620	Strut Fork	1	1	2	
28		54600	Nut, Plaine	1	1	2	
29	35413-001		Strap, Rear Jury Strut	1	1	2	
30	35423-501		Wing Tip Assembly, LH (optional)	opt			
30	35423-502		Wing Tip Assembly, RH (optional)		opt		

FIGURE 3 - Wing Installation, A-1C 200

ITEM	PART NUMBER	CODE NUMBER	DESCRIPTION	LH	RH	TOTAL QTY	Serial Eff.
	35423-503		Wing Tip Assembly, LH (standard)	1		1	
	35423-504		Wing Tip Assembly, RH (standard)		1	1	
31		56835	Screw, fillester Hd	76	76	152	
		60868	Nylon Washers	76	76	152	
32	35309-501		Fuel Tank Cover Assembly, LH	1		1	
32	35309-502		Fuel Tank Cover Assembly, RH		1	1	
33	35308-001		Cover, Bellcrank Access	1	1	2	
34	35421-001		Fairing, Landing Light	1		1	
35	35502-001		Splice Plate, Flap Cove	2	2	4	
36		62668	Rivet, Pull-stem	101	101	202	
37	35490--009		Fairing, Full Flap Cove LH	1		1	
37	35490-010		Fairing, Full Flap Cove RH		1	1	
40	35426-001		Fairing, Wing Root LH (leading edge)	1		1	
40	35426-002		Fairing, Wing Root RH (leading edge)		1	1	
41	35424-001		Fairing, Wing Root - Upper LH	1		1	
41	35424-002		Fairing, Wing Root - Upper RH		1	1	
42	35425-001		Fairing, Wing Root - Lower LH	1		1	
42	35425-002		Fairing, Wing Root - Lower RH		1	1	
43	35415-001		Fairing, Wing Root - T.E. Upper LH	1		1	
43	35415-002		Fairing, Wing Root - T.E. Upper RH		1	1	
44	35414-001		Fairing, Wing Root - T.E. Lower LH	1		1	
44	35414-002		Fairing, Wing Root - T.E. Lower RH		1	1	
45	35460-001		Rib, Wing Root Fairing LH	1		1	
45	35460-002		Rib, Wing Root Fairing RH		1	1	
46	35465-001		Rib, Wing Root Fairing LH	1		1	
46	35465-002		Rib, Wing Root Fairing RH		1	1	
47		59174	Pk Screw				
47			Wing Root L.E.	5	5	10	
47			Wing Root Fairing, Ctr (upper/lower)	22	22	44	
47			Wing Root Fairing, Aft (upper/lower)	32	32	64	
48		60866	No. 6 Nylon Washer (under heads)	59	59	118	
49		56835	Screw	31	31	62	
50		60868	Nylon Washer (under heads)	31	31	62	
52	35568-001		Landing Light Cover	1		1	
53		81650	Bearing, Rod End	3	3	6	
54		54700	Nut, Jam	3	3	6	
55		62661	Rivet, Pull-stem	150	150	300	
56		63941	Washer, Alum (tank area only)	150	150	300	
57		81860	Block, Upper Door Latch (rt wing only)		1	1	
58		62662	Rivet, Cherry pull-stem			3	
59		55612	Nut, Anchor self-lock			1	
60		56871	Screw			1	
61		81820	Catch, Elbow			1	
62		56546	Screw, flat head			2	

FIGURE 3 - Wing Installation, A-1C 200

ITEM	PART NUMBER	CODE NUMBER	DESCRIPTION	LH	RH	TOTAL QTY	Serial Eff.
63		81971	Decal, Wing Tip - A-1C (Insignia White)	1	1	2	
63		81972	Decal, Wing Tip - A-1C (Dakota Black)	1	1	2	
		81977	Decal, Wing Tip - Aviat Aircraft Husky (Dakota Black)	1	1	2	
		81978	Decal, Wing Tip - Aviat Aircraft Husky (Insignia White)	1	1	2	
			Decal, Wing Tip - A-1C (custom colors available)			2	
64	35215-007		Cap, Fuel Tank	1	1	2	
64	35403-001		Ring, Filler Neck	1	1	2	
65		61659	Inspection Cover (not illustrated)	1	1	2	
66		82051	Tape, Reflective - (not shown)			AR	
67		82155	Foam Tube			AR	

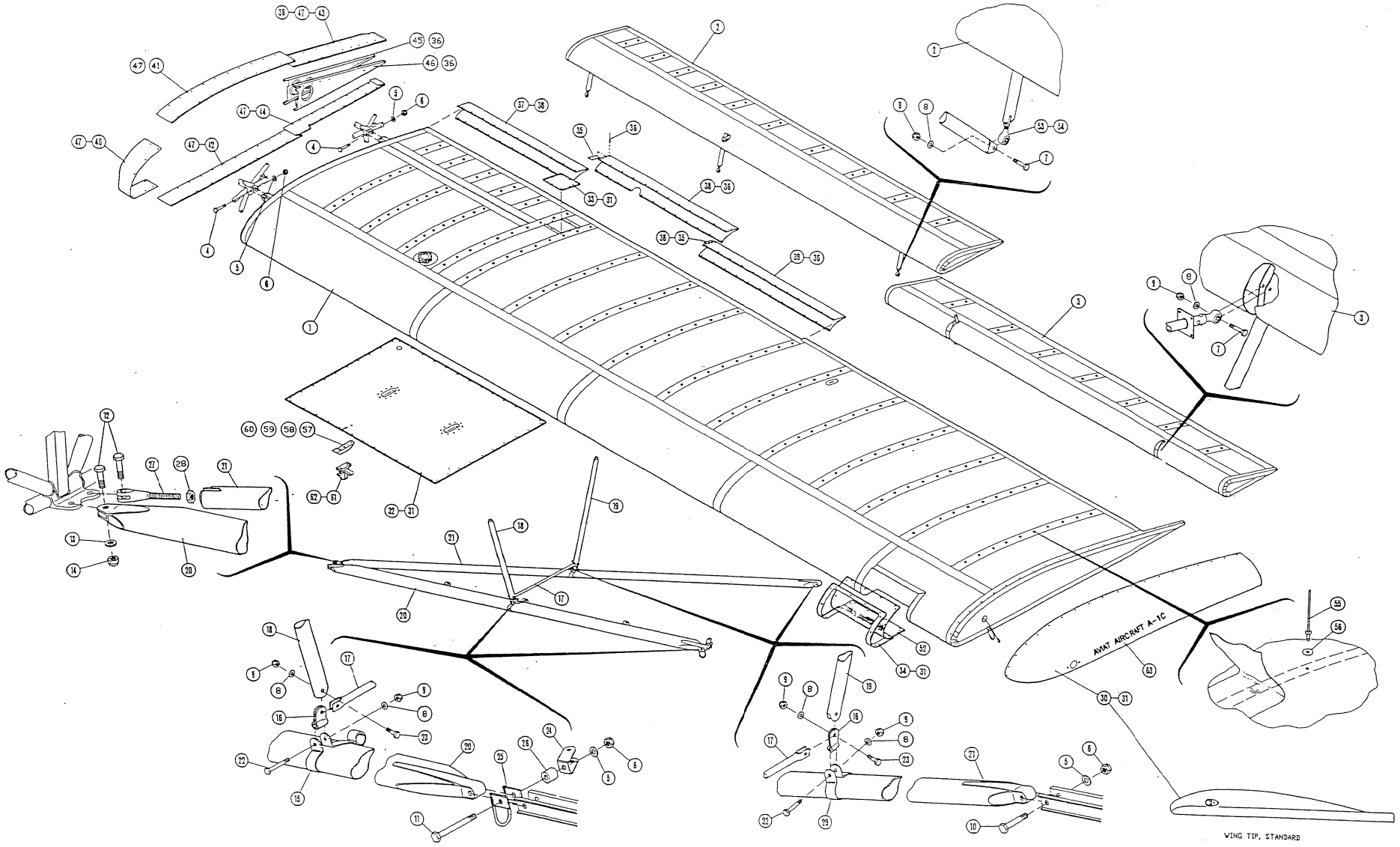

FIGURE 3: WING INSTALLATION

FIGURE 4 - Aileron Assembly, A-1C-200

ITEM	PART NUMBER	STOCK NUMBER	DESCRIPTION	L.H.	R.H.	TOTAL QTY	SERIAL EFFECTIVITY
	45153-501		Aileron Assembly, LH	1		1	
	45153-502		Aileron Assembly, RH		1	1	
	45154-501		Aileron Assembly, LH - Covered				
	45154-502		Aileron Assembly, RH - Coverdd				
1	45130-001		Spar, Aileron	1	1	2	
2	45029-001		Rib, Nose - Aileron	8	8	16	
3	45030-001		Rib, Trailing Edge - Aileron	8	8	16	
4	45133-001		Trailing Edge - Aileron	1	1	2	
5		62668	Rivet, Pull Stem	239	239	478	
6							
7	45135-001		Leading Edge Skin - Aileron	1	1	2	
8							
9		50026	Bolt, Hex Head - undrilled	2	2	4	
10		50026	Bolt, Hex Head - undrilled	2	2	4	
11		55392	Nut, Self-locking	4	4	8	
12		58740	Washer	6	6	12	
13	45230-001		Aileron Hinge Bracket Assembly	1	1	2	
14	45158-001		Plate, Aileron Spar Reinforcement	1	1	2	
15	45157-001		Plate, Aileron Spar Reinforcement	1	1	2	
16		62653	Rivet, Pull Stem	22	22	44	
17	45317-501		Weight Assy, Counterbalance	1	1	2	
		62662	Rivet, Pull Stem	6	6	12	(weight attach)
		55636	Platenut, self-locking	3	3	6	(weight attach)
18	45227-501		Aileron Hinge Bracket Assembly	1	1	2	
19	45131-001		Bracket, Aileron Spar Reinforcement	1	1	2	
20	45132-001		Bracket, Aileron Spar Reinforcement	1	1	2	
21	45317-004		Cover, Weight closure	1	1	2	not illustrated

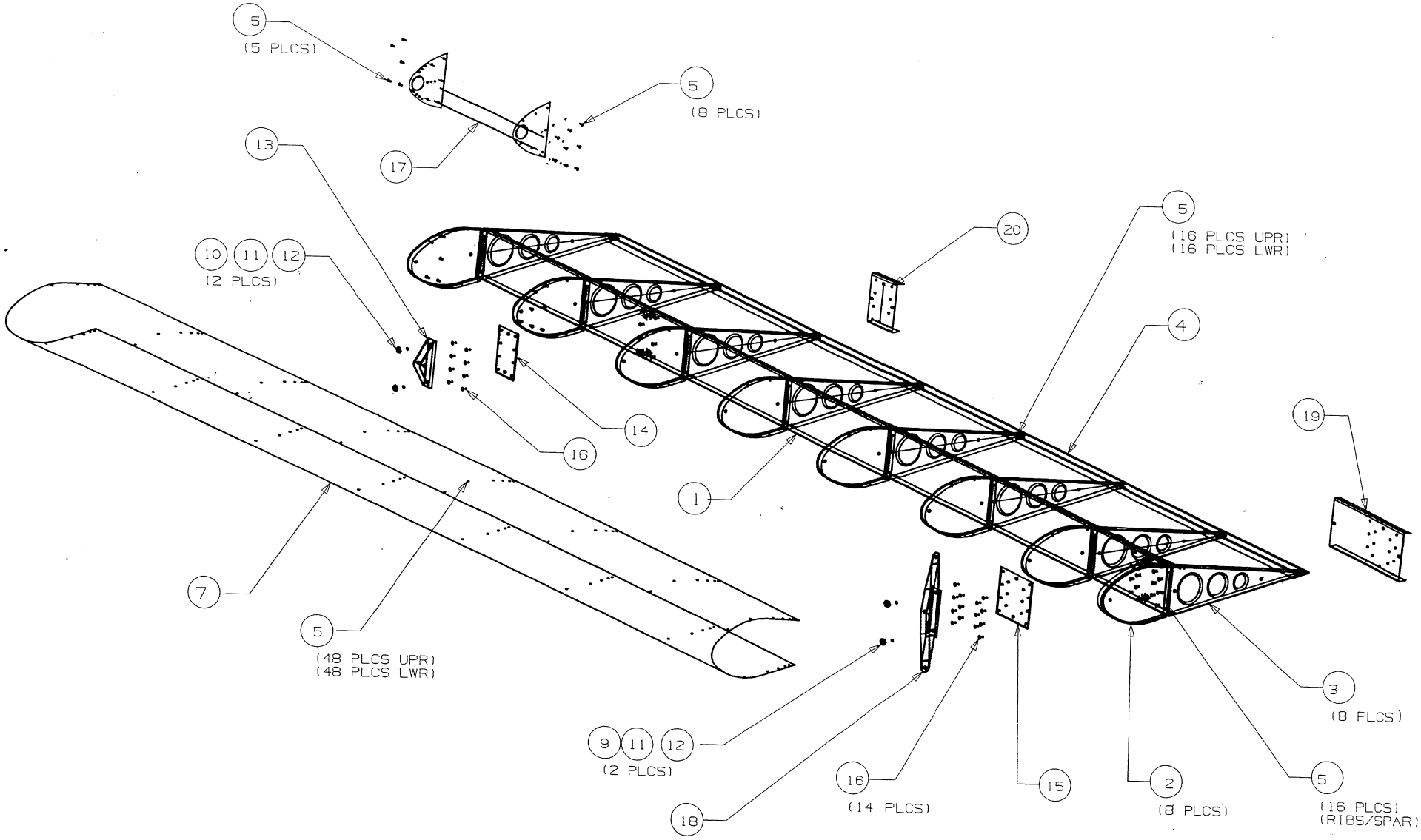

FIGURE 4: AILERON ASSEMBLY

FIGURE 5 - Flap Assembly, A-1C 200

ITEM	PART NUMBER	STOCK NUMBER	DESCRIPTION	LEFT FLAP	RIGHT FLAP	TOTAL QTY	SERIAL EFFECTIVITY
	45152-501		Flap Assembly, LH	1		1	
	45152-502		Flap Assembly, RH		1	1	
	45169-501		Flap Assembly, LH - Covered				
	45169-502		Flap Assembly, RH - Covered				
1	45129-001		Spar, Flap	1	1	2	
2	35027-001		Rib, Nose - Flap	13			
	35027-001		Rib, Nose - Flap		1		
3	35027-002		Rib, Nose - Flap	1			
	35027-002		Rib, Nose - Flap		13		
4	35028-001		Rib, Trailing Edge - Flap	13			
	35028-001		Rib, Trailing Edge - Flap		1		
5	35028-002		Rib, Trailing Edge - Flap	1			
	35028-002		Rib, Trailing Edge - Flap		13		
6	45133-002		Trailing Edge - Flap	1	1	2	
7		62668	Rivet, Pull Stem	306	306	612	
8	35134-001		Leading Edge Skin - Aileron, LH	1		1	
	35134-002		Leading Edge Skin - Aileron, RH		1	1	
9	35134-003		Leading Edge Skin - Aileron, LH	1		1	
	35134-004		Leading Edge Skin - Aileron, RH		1	1	
10	35134-005		Leading Edge Skin - Aileron, LH	1		1	
	35134-006		Leading Edge Skin - Aileron, RH		1	1	
11	35138-501		Flap Hinge Bracket Assembly	2	2	4	
12	35166-001		Bracket, Flap Spar Reinforcing	1	1	2	
13	35164-001		Plate, Flap Spar Reinforcing	2	2	4	
14	35166-002		Bracket, Flap Spar Reinforcing	1	1	2	
15		50176	Bolt, Hex Head - undrilled	3	3	6	
16		50276	Bolt, Hex Head - undrilled	3	3	6	
17		50026	Bolt, Hex Head - undrilled	2	2	4	
18		58740	Washer	16	16	32	
19		55601	Nut, Self-Locking	8	8	16	
20	35165-001		Bracket, Flap Spar Reinforcing	1	1	2	
21	35163-001		Plate, Flap Spar Reinforcing	1	1	2	
22		62653	Rivet, Cherry Max	18	18	36	
23	35147-501		Flap Hinge Bracket Assembly,LH	1		1	
	35147-502		Flap Hinge Bracket Assembly, RH		1	1	
24		81650	Bearing, Rod End (Heim)	3	3	6	
25		54700	Nut, Hex Jam	3	3	6	
26	35134-007		Leading Edge Skin - Aileron	1	1	2	

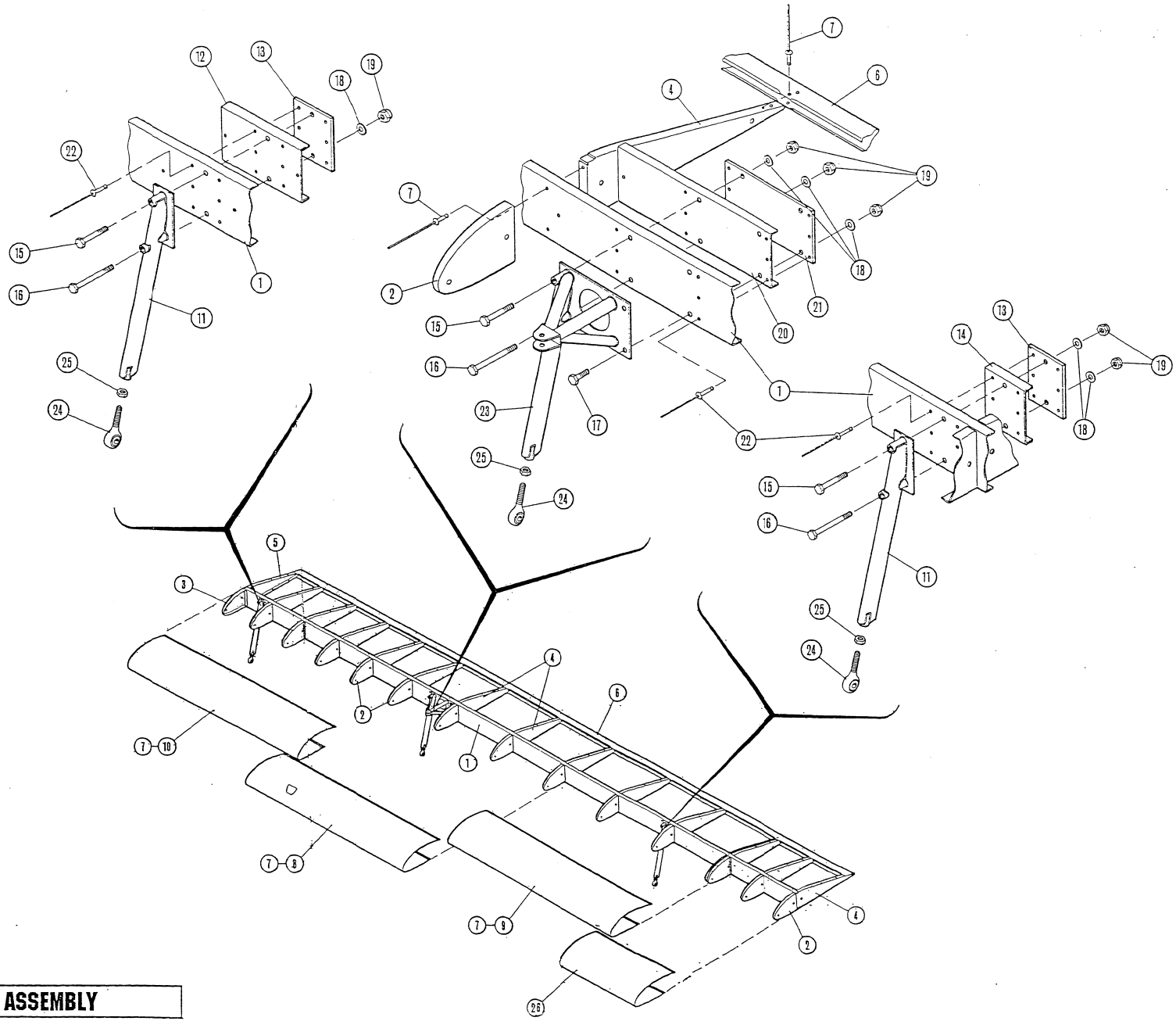

FIGURE 5: FLAP ASSEMBLY

FIGURE 6: Fuselage Structure, A-1C 200

ITEM	PART NUMBER	CODE NUMBER	DESCRIPTION	LH	RH	TOTAL QTY	SERIAL EFFECTIVITY
-	35001-501		Fuselage Frame Assembly			1	
1	35009-025		Tube, Fuselage (lower left longeron)	1		1	
	35009-026		Tube, Fuselage (lower right longeron)		1	1	
2	35009-005		Tube, Fuselage (upper left longeron)	1		1	
	35009-006		Tube, Fuselage (upper right longeron)		1	1	
3	35009-001		Tube, Fuselage (left side only)	1		1	
4	35009-002		Tube, Fuselage (right side only)		1	1	
5	35009-003		Tube, Fuselage (right side only)		1	1	
6	35009-004		Tube, Fuselage (right side only)		1	1	
7	35009-007		Tube, Fuselage - Side	1	1	2	
8	35009-008		Tube, Fuselage - Diag	1	1	2	
9	35009-009		Tube, Fuselage - Side	1	1	2	
10	35009-010		Tube, Fuselage - Side	1	1	2	
11	35009-011		Tube, Fuse. - Side	1	1	2	
12	35009-012		Tube, Fuse. - Side	1	1	2	
13	35009-013		Tube, Fuse. - Side	1	1	2	
14	35009-014		Tube, Fuse. - Side	1	1	2	
15	35009-015		Tube, Fuse - Side	1	1	2	
16	35009-033		Tube, Fuse - Side	1		1	
17	35009-017		Tube, Fuse - Side	1	1	2	
18	35009-018		Tube, Fuse - Side	1	1	2	
19	35009-019		Tube, Fuse. Side	1	1	2	
20	35009-020		Tube, Fuse. Side	1	1	2	
21	35009-021		Tube, Fuse. Side	1	1	2	
22	35009-022		Tube, Fuse. Side	1	1	2	
23	35009-023		Tube, Fuse Side	1	1	2	
24	35009-024		Tube, Fuse Side	1	1	2	
25		31475	Disc	1	1	2	
26		31475	Washer		2	2	(right side only)
27	35009-027		Tube, Fuselage (front)_		1	1	
	35009-028		Tube, Fuselage (rear)		1	1	
28	35001-002		Tube, Diag RH			1	
29	35001-004		Tube, Diag RH			1	
30	35001-001		Tube, Diag LH			1	
31	35001-003		Tube, Diag LH			1	
32	35001-005		Tube, Vertical			1	
33	35001-006		Tube, at Firewall - upper			1	
34	35001-008		Tube, Diag at Firewall - upper RH			1	
35	35001-007		Tube, Diag at Firewall - upper LH			1	
36	35001-073		Tube, Crossmember at Bungee Truss			1	
37	35001-009		Tube, at Firewall - lower left and right			2	
38	35001-011		Tube, at Firewall - vertical			1	
39	35001-012		Tube, at Firewall - lower			1	
40	35001-013		Tube, Fuselage - diag			2	
41	35001-014		Tube, Fuse RH			1	
42	35001-015		Tube, Fuse LH			1	
43	35001-016		Tube, Fuse - Crossmember			1	

FIGURE 6: Fuselage Structure, A-1C 200

ITEM	PART NUMBER	CODE NUMBER	DESCRIPTION	LH	RH	TOTAL QTY	SERIAL EFFECTIVITY
44	35041-502		Bungee Truss Member Assembly			1	
45	35001-017		Tube, Fuselage (pedal assy)	1	1	2	
46	35001-018		Tube, Fuselage (pedal assy)	1	1	2	
47	31246-502		Mount Assy - Brake Cylinder	1	1	2	
48	35001-020		Tube, Crossmember			1	
49	35001-021		Tube, lwr diag LH	1		1	
	35001-022		Tube, lwr diag RH		1	1	
50	35001-069		Tube, upr diag L/R	1	1	2	
51	35001-078		Tube, Crossmember			1	
52	35001-023		Tube, Fuselage LH	1		1	
	35001-024		Tube, Fuselage RH		1	1	
53	35001-070		Tube; seat support			1	
54	35001-025		Tube, Fuselage - Lower LH	1		1	
	35001-026		Tube, Fuselage - Lower RH		1	1	
55	35001-027		Tube, Seat Support			1	
56	35001-028		Tube, Upr Diag L/H	1	1	2	
57	35001-029		Tube, Crossmember Lwr			1	
58	35001-030		Tube, Crossmember Upr			1	
59	35001-031		Tube, Bot Diag LH	1		1	
	35001-032		Tube, Bot Diag RH		1	1	
60	35039-501		FRONT SEAT ASSEMBLY			1	
61	35001-033		Tube, LH Diag	1		1	
	35001-034		Tube, RH Diag		1	1	
62	35001-077		Tube, Shoulder Harness Support			1	
63	35001-071		Tube, LH Vertical	1		1	
	35001-072		Tube, RH Vertical		1	1	
64	35057-501		TAIL POST ASSEMBLY			1	
65	35001-035		Tube, Vert. Stab. Suppt LH	1		1	
	35001-036		Tube, Vert. Stab. Suppt RH		1	1	
66	35002-501		VERTICAL STABILIZER ASSEMBLY			1	
67	35001-038		Tube, Fuse - Bot Diag			1	
68	35001-076		Tube, Crossmember				
69	35001-039		Tube, Diag LH	1		1	
	35001-040		Tube, Diag RH		1	1	
70	35001-041		Tube, Crossmember Lwr				
71	35001-042		Tube, Fuse. Diag			1	
72	35001-043		Tube, Fuse. Top Diag			1	
73	35001-044		Tube, Fuse. Diag Bottom			1	
74	35001-045		Tube, Crossmember			1	
75	35001-046		Tube, Fuse. Diag Top			1	
76	35001-047		Tube, Fuse. Crossmember			1	
77	35001-048		Tube, Fuse. Diag			1	
78	35001-049		Tube, Fuse. Crossmember			1	
79	35001-050		Tube, Fuse Bot Diag			1	
80	35001-051		Tube, Fuse Diag			1	
81	35001-052		Tube, Fuse, Top Diag			1	
82	35001-053		Tube, Fuselage - Lower LH			1	
83	35001-054		Tube, Fuselage - Upper			1	
84	35001-055		Tube, Crossmember			1	

FIGURE 6: Fuselage Structure, A-1C 200

ITEM	PART NUMBER	CODE NUMBER	DESCRIPTION	LH	RH	TOTAL QTY	SERIAL EFFECTIVITY
85	35001-056		Tube, Fuselage - Lower RH			1	
86	35001-075		Tube, Fuse. Pedal Support L/R	1	1	2	
87	35001-057		Tube Fuse Diag Bot LH	1		1	
	35001-058		Tube Fuse Diag Bot RH		1	1	
88	35001-059		Tube, L.E Support		1	1	
89	35001-060		Tube, Fuselage			1	
90	35001-074		Tube, Fuselage			1	
91	35001-083		Tube, Fuse - Battery Support			1	
92	35001-061		Tube, Fuselage LH	1		1	
	35001-062		Tube, Fuselage RH		1	1	
93	35001-067		Tube, Front seat support fwd diag LH	1		1	
	35001-068		Tube, Front seat support fwd diag RH		1	1	
94	35001-063		Tube, Front seat support fwd vert LH	1		1	
	35001-064		Tube, Front seat support fwd vert RH		1	1	
95	35001-065		Tube, Front seat Diag Suppt LH	1		1	
	35001-066		Tube, Front seat Diag Suppt RH		1	1	
96	35001-081		Tube, Front seat Rear Suppt LH	1		1	
	35001-082		Tube, Front seat Rear Suppt RH		1	1	
97	35001-079		Tube, Fuselage			1	
98	35001-111		Tube, Rear Stabilizer Support			1	
99	35001-080		Tube, Fuselage			2	
100	35002-002		Tube, Leading Edge - Vert Stab			1	
101	35002-001		Tube, Tailpost			1	
102	30680-008		Rib, Vert Stabilizer - Top			1	
103	30680-007		Rib;, Vert Stabilizer - Center			1	
104	30680-006		Rib, Vert Stabilizer - Bottom			1	
105	30294-005		Disc			1	
106	30294-006		Disc			1	
107	30294-001	31475	Disc			4	
108	35040-502		REAR SEAT BACK ASSEMBLY			1	
109		50851	Bolt, undrilled			3	
110		58760	Washer			3	
111		55400	Nut, self-locking nylon			3	
112	35001-088		Angle, Panel Attachment Lower			1	(refer to detail_
113	35001-089		Former, Side RH		1	1	
114	35001-090		Channel, Seat Lock	1	1	2	(refer to detail_
115	35001-097		Tube, Vertical Support	1		1	(refer to detail_
116	35001-098		Tube, Horizontal Support		1	1	(refer to detail_
117	35009-031		Sill Tube, L/R	1	1	2	(refer to detail_
118	no item						item # not used
119	35009-034		Tube, RH Diag - Fwd Upper		1	1	(refer to detail_
120	35009-035		Tube, RH Diat - Fwd Lower		1	1	(refer to detail_
121	35009-036		Tube, RH Diag - Aft		1	1	(refer to detail_
122							
123	35039-007		Tube; Seat Support	1	1	2	
124	35039-008		Tube, Seat Support	1	1	2	

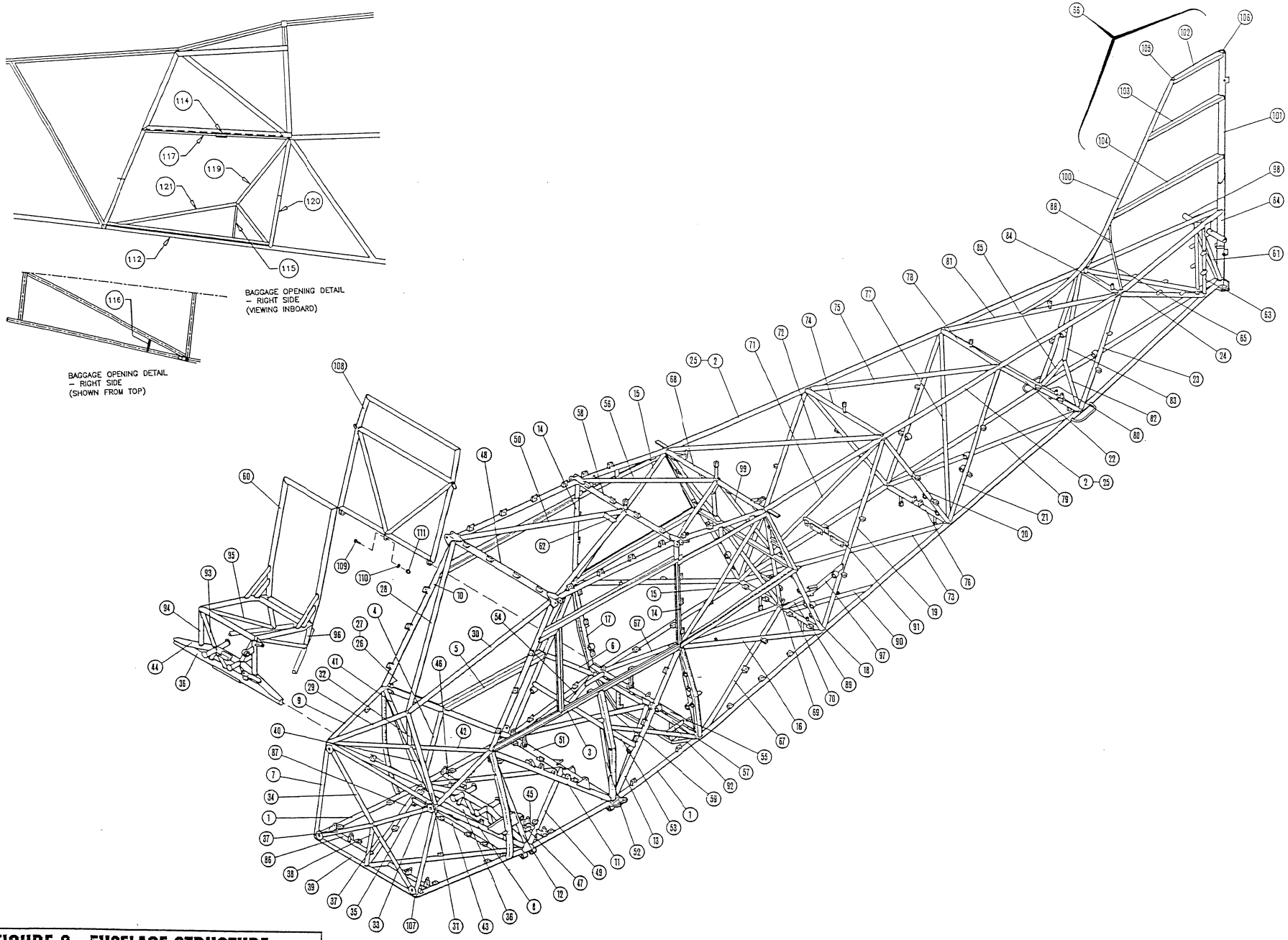

FIGURE 6: FUSELAGE STRUCTURE

FIGURE 7: Fuselage Tabs Brackets, A-1C 200

ITEM	PART NUMBER	CODE NUMBER	DESCRIPTION	LH	RH	TOTAL QTY	SERIAL EFFECTIVITY
1	30146-003		Washer			4	
2	30504-013		Tube			4	
3	35108-001		Tab, Fuel Tee			1	
4	35110-001		Bracket, Fuel Valve			1	
5	30853-002		Tab (unless otherwise shown)			88	
6	35092-001		Channel, Sliding window -fwd	opt			opt
6a	35092-005		Channel, Sliding window -fwd	1		1	std
7	35092-002		Channel Assy, Sliding Window Lwr LH	opt			opt
7a	35092-506		Channel Assy, Sliding Window Lwr LH	1		1	std
8	35092-003		Channel, Sliding Window	1		1	
9	35079-001		Channel, Window Frame Aft Lwr L/R	1	1	2	
10	35079-002		Channel, Window Frame Aft RR L/R	1	1	2	
11	35079-003		Channel, Window Frame Aft Upr L/R	1	1	2	
12	35079-004		Channel (opt fixed fwd window - bottom)	opt			opt
13	35079-005		Channel, (opt fixed fwd window - front)	opt			opt
14	35079-006		Channel, (opt fixed fwd window - top)	opt			opt
15	35091-001		Channel, Window Sill (left side)	1		1	
	35091-002		Channel, Window Sill (right side)		1	1	
16	35091-501		Throttle Bracket Assembly			1	
17	35048-001		Bracket, Aileron Stop (left side)	1		1	
	35048-002		Bracket, Aileron Stop (right side)		1	1	
18	30504-026		Tube	1	1	2	
19	30830-001		Tab, Brake Pedal	4	4	8	
20	30504-031		Tube			20	
21	35069-001		Tab, Fuselage Former			2	
22	35096-001		Former, Fuselage (LH Sta. 65-70)	1		1	
	35096-002		Former, Fuselage (RH Sta. 65-70)		1	1	
23	35098-001		Channel, Reinforcing			1	
24		30575	Tab, Elevator Idler			9	
25	30589-015		Spacer, Rectangular			2	
26	35095-001		Former, Fuselage - bottom at Sta. 70			1	
27	35077-001		Bracket, Channel Support (left side)	1		1	
	35077-002		Bracket, Channel Support (right side)		1	1	
28		81490	Wing Root Fitting (left side, aft)			1	
		81485	Wing Root Fitting (right side aft)			1	
29		81500	Wing Root Fitting (left side, forward)	1		1	
		81495	Wing Root Fitting (right side, forward)		1	1	
30		82030	Tube			2	
31		33145	Bracket, Fairing			31	
32		82035	Tube			1	
33		82010	Tube			4	
34		82015	Tube			2	
35		30920	Spacer, Rectangular			6	
36		81565	Tube			2	
37		82020	Tube			2	
38		82025	Tube			2	
39	35117-001		Tab, Windshield Bracket			4	

FIGURE 7: Fuselage Tabs Brackets, A-1C 200

ITEM	PART NUMBER	CODE NUMBER	DESCRIPTION	LH	RH	TOTAL QTY	SERIAL EFFECTIVITY
40	2-2100-130		Bracket, Throttle Cable			1	
41	35070-001		Tab, Panel Attach			2	
42	35045-001		Bracket, Wing Strut Attach			2	
43	35046-001		Bracket, Wing Strut Attach (left side)	1		1	
	35046-002		Bracket, Wing Strut Attach (right side)		1	1	
44		79216	Lug, Landing Gear	6	6	12	
45		82100	Strap, Fuselage	1		1	
		82105	Strap, Fuselage		1	1	
46	35483-001		Plate, Trim Pulley			1	
47	35049-001		Guard, Pulley	1	1	8	
48		30160	Tube			5	
49		82395	Tab, Pulley			4	
50		30975	Gusset, Pedal Spring			2	
51		30840	Tab			6	
52		82465	Bracket, Pulley			2	
53	35099-001		Former, Fuselage left side Sta. 48.75	1		1	
54	35100-001		Former, Fuselage left side Sta. 17-27	1		1	
	35100-002		Former, Fuselage right side Sta 17-27		1	1	
55	35318-001		Tab, Former	1	1	2	
56		82045	Tube			1	
57	35072-001		Tab, Flap Pivot			1	
58	35073-001		Tab, Flap Pivot			1	
59	35074-501		MOUNT ASSEMBLY, FLAP LEVER			1	
60		82480	Bracket, Torque Tube Brng			1	
61	35087-501		MOUNT ASSEMBLY, FLAP RATCHET			1	
62	35043-001		Channel, Bungee Truss Assembly			1	
63	35088-001		Channel, Door Sill - Rear (hidden)		1	1	
64	35089-001		Channel, Door Sill - Front		1	1	
65	35090-001		Channel, Door Sill - Bottom		1	1	
66	35094-001		Tab, Door Stop		2	2	
67	30589-013		Spacer, Rectangular		3	3	
68		30070	Tube, Precision			2	
69		79010	Tube			4	
70	35289-001		Tab, Pulley Bracket			1	
71		80110	Tab, Control Arm Attach			2	
72	35001-037		Tube, Support			1	
73			Tube;, Relay Mtg			2	
74	30589-020		Spacer, Rectangular			1	
75		76069	Plate, Battery Box			1	
76	35082-001		Tab, Window Channel			2	
77	35083-001		Tab, Window Channel			2	
78	35084-001		Bracket, Window Channel (left side)	1		1	
	35084-002		Bracket, Window Channel (right side)		1	1	
79	35068-001		Tab, Fairing			2	
80		82040	Tube			2	
81	35080-001		Channel, Window Sill (left side)	1		1	
	35080-002		Channel, Window Sill (right side)		1	1	
82	35081-001		Channel, Baggage Compartment			1	
83	35078-001		Channel, Wing Fairing	1	1	2	

FIGURE 7: Fuselage Tabs Brackets, A-1C 200

ITEM	PART NUMBER	CODE NUMBER	DESCRIPTION	LH	RH	TOTAL QTY	SERIAL EFFECTIVITY
84	35085-001		Tab, Shoulder Harness			1	
85	35589-014		Spacer, Rectangular			2	
86	35062-001		Bracket, Fuel Tee			1	
87	35036-001		Tab, Fairing			10	
88		78029	Tab, Ground			1	
89	31262-501		SPRING SUPPORT ASSEMBLY			1	
90		82435	Plate, Tail Spring			1	
91		82125	Plate, Stabilizer Spring			2	
92	30707-011		Plate			2	
93	35066-001		Handle, Fuselage			2	
94		30155	Tube			1	
95		30790	Saddle			2	
96		30925	Spacer, Rectangular			4	
97		78066	Tab, Access Panel			4	
98	35011-111		Cover, Wire			3	
99	35079-007		Channel, Window Support			1	
100	35001-106		Bracket Assembly, Flap Pulley Support (Production Welded Application)			1	
101		79265	Bushing			1	
102	35001-009		Tube			1	
103	35001-110		Tube			1	
104	35049-001		Pulley Guard			1	
105	35289-001		Tab, Pulley Bracket			1	
106	35039-007		Tube, Seat Support	1	1	2	
107	35039-008		Tube, Seat Support	1	1	2	

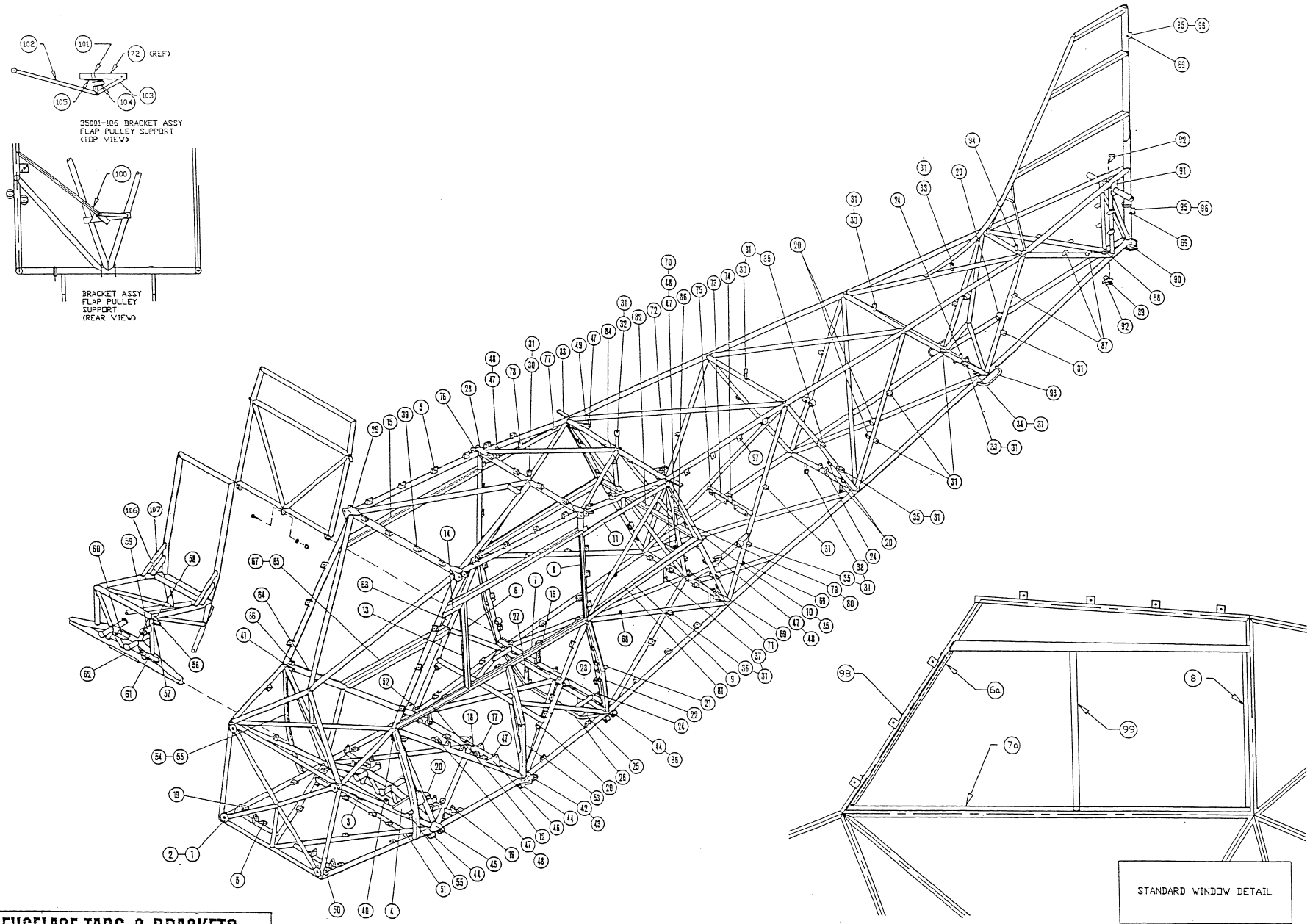

FIGURE 7: FUSELAGE TABS & BRACKETS

FIGURE 8: Fuselage Fairings, A-1C 200

ITEM	PART NUMBER	STOCK NUMBER	DESCRIPTION	LH	RH	TOTAL QTY	SERIAL EFFECTIVITY
1	35261-001		Stringer, Fuselage Bottom			2	
	(ref item 5)	56655	Screw			6	
	(ref item 6)	55475	Nut, self-locking nylon			6	
2	35262-001		Stringer, Fuselage Lower Side			2	
	(ref item 5)	56655	Screw	8	7	15	
	(ref item 6)	55475	Nut, self-locking nylon	8	7	15	
	(ref item 7)	62669	Rivet, pull-stem	2	2	4	
3	35263-001		Stringer, Fuselage Upper Side			2	
	(ref item 5)	56655	Screw	7	7	14	
	(ref item 6)	55475	Nut, self-locking nylon	7	7	14	
	(ref item 7)	62669	Rivet, pull-stem	3	3	6	
4	35262-004		Stringer, Fuselage Top			1	
	(ref item 5)	56655	Screw	7	7	14	
	(ref item 6)	55475	Nut, self-locking nylon	7	7	14	
5		56655	Screw	(combined usage 49)			(items 1,2,3,4)
6		55475	Nut, self-locking nylon	(combined usage 57)			(items 1,2,3,4)
7		62669	Rivet, pull-stem	(combined usage 10)			(items 1,2,3,4)
8	35269-001		Former, Fuselage (left side)	1		1	
	35269-002		Former, Fuselage (right side)		1	1	
9		56834	Screw			4	
10		62668	Rivet, Cherry (pull-stem)	1	1	13	
11	35101-501		Former Assembly, Fuselage			1	
12		56570	Screw			4	
13		55627	Nut Plate			4	
14		62662	Rivet, Cherry (Pull-Stem)			32	
15		55617	Nut Plate			12	
16	35577-501		Access Door Frame Assembly, LH	1		1	
	35577-502		Access Door Frame Assembly, RH		opt	1	(optional)
17		56546	Screw (top attach)	4	opt	8	(optional 4)
		55475	Nut, self-locking nylon (top attach)	4	opt	8	(optional 4)
		62665	Rivet, Cherry - pull-stem (bottom attach)	5	opt	10	(optional 5)
18		62611	Recepticle, Fastener - Camloc	5	opt	10	(optional 5)
19		56086	Rivet, flush head (recepticle attach)	10	opt	20	(optional 10)

FIGURE 8: FUSELAGE FAIRINGS

FIGURE 9: Covered Assembly, A-1C 200

ITEM	PART NUMBER	STOCK NUMBER	DESCRIPTION	LH	RH	TOTAL QTY	SERIAL EFFECTIVITY
	35312-501		Fuselage Assembly, Covered			1	
1	35001-501		Fuselage Frame Assembly			1	
2		40649	Fabric, Polyester Greige (70 inch wide)			10 yds	
3		41645	Tape, Pinked Cotton (3 inch width)			AR	
		41642	Tape, Pinked Cotton (2 inch width)			AR	
		41644	Tape, Pinked Cotton (1 inch width)			AR	
4		84211	Nitrate Dope			AR	
		84220	Nitrate Thinner			AR	
5		93889	Cement, Superseam			AR	
6		93890	Paste, Aluminum			1	
7		95526	Thinner, Butyrate			12	
8		95524	Dope, Butyrate			11	
9			Urethane, custom colors			AR	as per color requirement
		84125	Urethane Reducer			AR	
		84130	Urethane Hardner			AR	
10		62675	Ring, Inspection Hole (belly)			4	
		62675	Ring, Inspection Hole (left side)	5		5	
		62675	Ring, Inspection Hole (right side)		6	6	total 11 per a/c
11		61659	Cover, Inspection Hole (factory standard)			4	
		61659	Cover, Inspection Hole (opt req'mt)			11	Optional

FIGURE 9: COVERED FUSELAGE

FIGURE 10: Tail Surfaces Installation, A-1C 200

ITEM	PART NUMBER	CODE NUMBER	DESCRIPTION	LH	RH	TOTAL QTY	SERIAL EFFECTIVITY
	35006-503		Rudder Assembly (covered)				
	36007-501		Horiz. Stabilizer Assembly, LH (covered)				
	36007-502		Horiz. Stabilizer Assembly, RH (covered)				
	35008-503		Elevator Assembly, LH (covered)				
	35008-504		Elevator Assembly, RH (covered)				
1	36004-501		Horiz. Stabilizer Assy, LH (uncovered)	1		1	
	36004-502		Horiz. Stabilizer Assy, RH (uncovered)		1	1	
2	35005-503		Elevator Assembly, LH (uncovered)	1		1	
	35005-504		Elevator Assembly, RH (uncovered)		1		
3	35003-503		Rudder Assembly, uncovered			1	
	35002-501		Vertical Stabilizer Assembly (uncovered)			1	
4	35004-001		Spar, Stabilizer	1	1	2	
5	35004-002		L.E. Tube, Stabilizer	1	1	2	
6	35004-003		Tube, Diag - Stabilizer	1	1	2	
7	30679-006		Rib, Stabilizer			2	
8	30679-005		Rib, Stabilizer	1	1	2	
9	30679-004		Rib, Stabilizer	1	1	2	
10	30678-002		Rib, Stabilizer Root	1	1	2	
11		81431	Bushing (angled)	1	1	2	
12	35066-001		Handle, fuselage	1	1	2	
13	35252-001		Rib, Stabilizer Tip	1	1	2	
14		79010	Tube	1	1	2	
15		30925	Spacer, Rectangle	1	1	2	
16		30790	Saddle	1	1	2	
17	35005-001		Spar, Elevator	1	1	2	
18	35005-002		Tie Rod, Elevator - (outboard aft)	1	1	2	
19	35005-005		Tie Rod, Elevator - (outboard fwd)	1	1	2	
20	35005-004		Trailing Edge Tube, Elevator	1	1	2	
21	30681-005		Rib, Elevator - (aft mid)	2	2	4	
22	30680-012		Rib, Elevator - (aft outboard)	1	1	2	
23	30681-017		Rib, Elevator - (fwd)	1	1	2	
24		30145	Tube, collar			7	
25	30677-501		Horn Assembly, Elevator LH	1		1	
	30677-502		Horn Assembly, Elevator RH		1	1	
26	35316-003		Weight, counterbalance	1	1	2	
27	35003-001		Trailing Edge Tube, Rudder - lower			1	
28	35003-002		Trailing Edge Tube, Rudder - upper			1	
29	35003-003		Spar, Rudder			1	
30	35003-004		Tube, Rudder Horn			1	

FIGURE 10: Tail Surfaces Installation, A-1C 200

ITEM	PART NUMBER	CODE NUMBER	DESCRIPTION	LH	RH	TOTAL QTY	SERIAL EFFECTIVITY
31	35003-005		Tube, Rudder Horn - vertical			2	
32	30680-011		Rib, Rudder - Upper			1	
33	30680-010		Rib, Rudder - Upper Mid			1	
34	30680-009		Rib, Rudder - Lower Mid			1	
35	30681-004		Rib, Rudder - Lower			1	
36	30674-001		Sleeve, Tubular Spar			1	
37		30985	Horn, Rudder			1	
38	35245-001		Plate, Rudder Spring Attach			2	
39		60880	Bracket, Taillight			1	
40	30681-016		Rib, Rudder - fwd				
41	35315-003		Weight, Rudder Counterbalance				
	35003-006		Weight Recepticle, Fwd	1	1	2	
	35003-007		Weight Recepticle, Mid	1	1	2	
	35003-008		Weight, Recepticle, Aft (rudder usage)	1	1	2	(combine w/82)
42	35086-501		Stabilizer Support Assembly			1	
43		51426	Bolt, undrilled shank	1	1	8	
44		58760	Washer	7	7	15	
45		55400	Nut, self-locking	1	1	8	
46		50902	Bolt, undrilled shank	2	2	4	
47							
48							
49		56954	Terminal, Tie Rod	1		1	
		56955	Terminal, Tie Rod		1	1	
50		54560	Nut, Jam	1	2	2	
51		50151	Bolt, undrilled shank	2	2	4	
52		58740	Washer	2	2	4	
53		55601	Nut, self-locking	2	2	4	
54	35251-001		Bracket, Strut Attach			1	
55		32175	Bearing Segment			8	
56	30592-901		Strap, Bearing Support - painted	2	2	4	
57	30592-901		Strap, Bearing Support - painted	1	1	2	
58	30916-905		Fitting, Tail Wire Attach	1	1	2	
59	30916-906		Fitting, Tail Wire Attach	1	1	2	
60		51126	Bolt, undrilled shank			4	
61		51051	Bolt, undrilled shank			1	
62		60107	Bearing			2	
63		50201	Bolt, undrilled shank			2	
64		59011	Bolt, Full Thread - Rudder Stop	1	1	2	
65		54548	Nut, Jam	1	1	2	
66		57085	Streamlined Tie Rod (50-1/2")	1	1	2	
67		56950	Terminal, Tie Rod (bottom)	1	1	2	
68		56940	Terminal, Tie Rod (top))	1	1	2	
69		55975	Clevis Pin	2	2	4	
70		55675	Cotter Pin	2	2	4	
71	35249-001		Shim, (.018 Thick)			A/R	
	35249-002		Shim, (.020 Thick)			A/R	
	35249-003		Shim, (.025 Thick)			A/R	
72	35463-001		Fairing, Stabilizer - root (left side)	1		1	
	35463-002		Fairing, Stabilizer - root (right side)		1	1	
73	35464-001		Fairing, Stabilizer - root (left side)	1		1	

FIGURE 10: Tail Surfaces Installation, A-1C 200

ITEM	PART NUMBER	CODE NUMBER	DESCRIPTION	LH	RH	TOTAL QTY	SERIAL EFFECTIVITY
	35464-002		Fairing, Stabilizer - root (right side)		1	1	
74		59174	No. 6 x 3.8 PK Screw				
75		54549	Nut, Jam				
76	35458-001		Tab, Rudder Trim			1	
77	35587-001		Fitting, Tail Wire	1	1	2	
78		81352	Tie Rod, Threaded	1	1	2	
		54090	Fork, Turnbuckle	2	2	4	
		54700	Nut, Jam	2	2	4	
79	36250-505		Tail Strut Assembly	1	1	2	
80	35648-002		Terminal, Threaded	1	1	2	
81		54725	Nut, Jam	1	1	2	
82	35003-008		Weight Recepticle, Aft (elevator usage)	1	1	2	

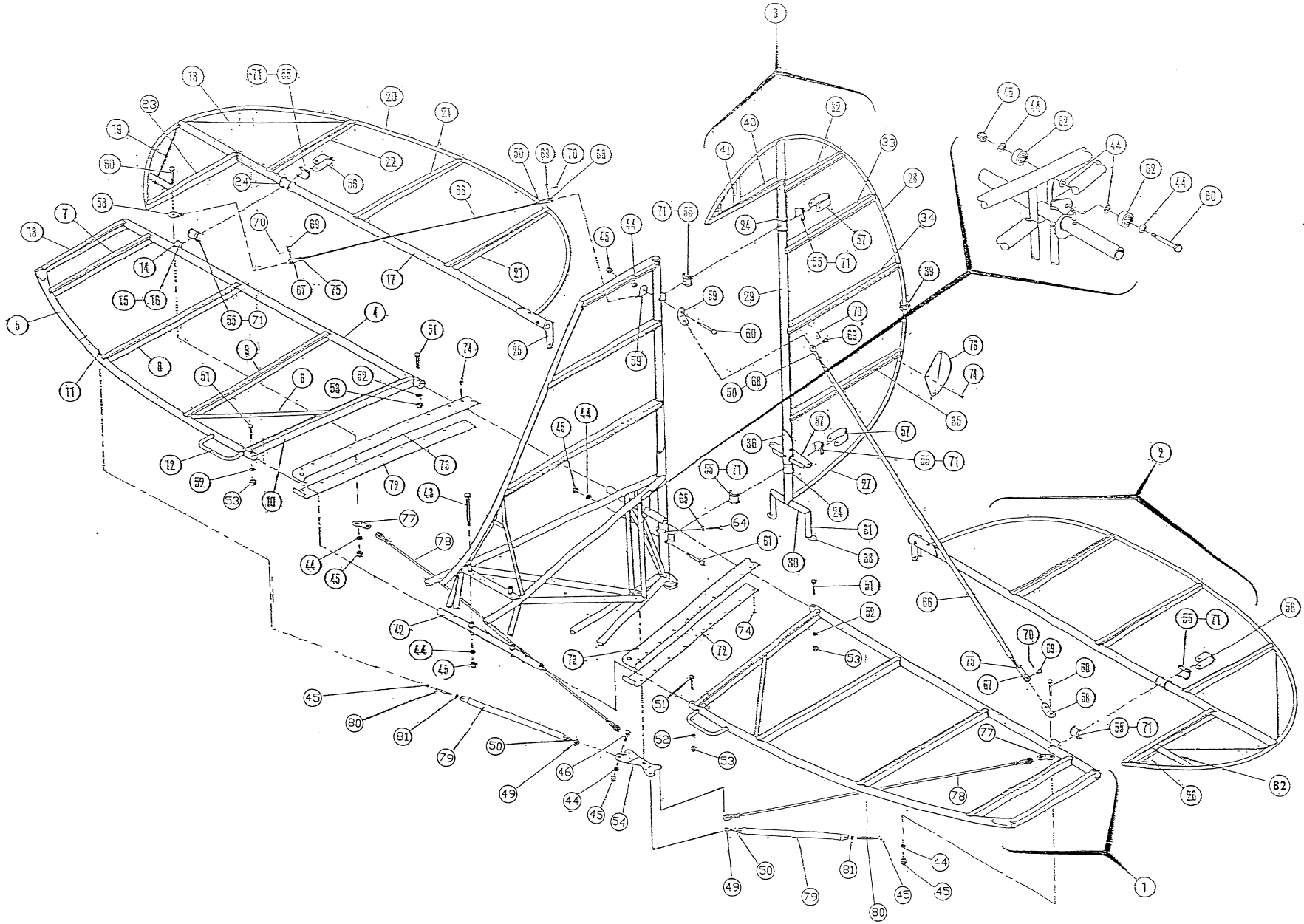

FIGURE 10 – Tail Surfaces Installation

FIGURE 11 - Elevator Control System, A-1C 200

ITEM	PART NUMBER	STOCK NUMBER	DESCRIPTION	LH	RH	TOTAL QTY	SERIAL EFFECTIVITY
1	35034-501		Torque Tube Assembly, Front			1	
2	35033-501		Torque Tube Assembly, Rear			1	
3	30713-522		Push Rod Assembly (inside fwd tube)			1	
4	30713-521		PUSH Rod Assembly			1	
5	30713-520		Push Rod Assembly				
6	30713-519		Elevator Push Tube Assembly, (aft control stick to fwd idler)			1	
7	35228-501		Elevator Push Tube Assembly, (fwd idler to aft idler)			1	
8	35288-502		Elevator Push Tube Assembly, (aft idler to elevator control arm)			1	
9	30721-503		Idler Assembly, Elevator - (rear)			1	
10	30721-502		Idler Assembly, Elevator - (center)			1	
11	35047-501		Control Arm Assembly			1	
	35047-901		Control Arm Assembly, w/bearing Install.			1	
12	30723-501		Idler Assembly, Elevator - (front)			1	
13	30666-001		Bearing Base, Torque Tube			2	
14	30667-001		Baring Cap, Torque Tube			2	
15	30725-501		Lever Assembly, Control Stick			2	
16	35240-001		Control Stick, Rear			1	
	35240-002		Control Stick, Front			1	
17		32196	Grip Assembly, Stick			2	
18		50026	Bolt, undrilled shank			4	
19		58740	Washer			21	
20		55392	Nut, self-locking steel			13	
21		59012	Bolt, Full Thread			2	
22		54550	Nut, Jam			2	
23		60100	Bearing, Rod End			10	
24		54575	Nut, Jam			10	
25		50051	Boltl, undrilled shank			3	
26		58750	Washer			3	
27		55380	Nut, self-locking fiber			3	
28		50076	Bolt, undrilled shank			4	
29		50151	Bolt, undrilled shank			2	
30		50126	Bolt, undrilled shank			1	
31		51175	Bolt, drilled shank			3	
32		50996	Bolt, drilled shank			2	
33		58760	Washer			12	
34		54400	Nut, Hex castle			8	
35		55675	Cotter Pin			8	
36		60107	KP4 Bearing			6	
37		51140	Bolt, drilled shank			1	
38		61423	Fitting, Lubricant			2	
39		51450	Bolt, undrilled shank			2	
40		51376	Bolt, undrilled shank			2	
41		55400	Nut, self-locking fiber			2	
42		51250	Bolt, drilled shank			2	
43		50176	Bolt, undrilled shank			2	

FIGURE 11: ELEVATOR CONTROL SYSTEM

FIGURE 12 - Trim Control System, A-1C 200

ITEM	PART NUMBER	CODE NUMBER	DESCRIPTION	LH	RH	TOTAL QTY	SERIAL EFFECTIVITY
1	35276-001		Frame, Elevator Trim Control			1	
2	35275-501		Elevator Trim Horn Assembly			1	
3	35274-001		Link, Elevator Trim Horn			1	
4	35284-501		Cable Assembly, (front LH)			1	
5	35284-502		Cable Assembly, (rear LH)			1	
6	35284-503		Cable Assembly, (rear RH)			1	
7	35284-504		Cable Assembly, (front RH)			1	
8		81730	Spring			1	
9		81175	Trim Spring, Upper			1	
10		61300	Bushing, Fairlead half			18	
11		60873	Ring, Fairlead Snap			9	
12		53875	Shackle, Cable			4	
13	35488-501		Trim Cable Assembly			1	
14		56871	Screw			1	
15		50026	Bolt, undrilled shank			3	
16		50025	Bolt, drilled shank			2	
17		55601	Nut, self-locking fiber			5	
18		54375	Nut, castle			4	
19		58740	Washer			6	
20		55675	Cotter Pin			4	
21		56570	Screw, flush head			2	
22		56858	Screw			4	
23		55380	Nut, self-locking fiber			1	
24		58750	Washer			9	
25	35481-001		Link, Trim Indicator			1	
26		50050	Bolt, drilled shank			2	
27	30504-094		Tube			1	
28		58730	Washer, thin			3	
29		55375	Nut, self-locking fiber			1	
30		56834	Screw			3	
31		55550	Nut, self-locking fiber			2	
32		62577	Pulley			1	
33		50995	Bolt, undrilled head			3	
34		58760	Washer			3	
35		54400	Nut, Hex castle			1	
36		55700	Cotter Pin			1	
37		56850	Screw			1	
38		56656	Screw			1	
39		55475	Nut, self-locking fiber			8	
40	35467-001		Bracket, Trim Indicator			1	
41		54076	Barrel, Turnbuckle			2	
42	35283-001		Arm, Trim Indicator			1	
43	35468-001		Link, Trim Indicator			1	
44		54168	Eye, Turnbuckle			1	
45	35484-501		Trim Fairlead Bracket Assembly			1	
46		56626	Screw			2	
47	35443-501		Trim Wheel Housing			1	
48		81153	Bushing			1	

FIGURE 12 - Trim Control System, A-1C 200

ITEM	PART NUMBER	CODE NUMBER	DESCRIPTION	LH	RH	TOTAL QTY	SERIAL EFFECTIVITY
49	35456-002		Shaft, Pinion Gear			1	
50	35278-002		Housing, Pinion Gear			1	
51		81170	Spring, Coil			1	
52	35279-001		Plate, Pinion Gear Housing			1	
	35277-502		Sector Gear Bracket Assembly			1	
	35052-003		Anti-Chafe Pad			1	(not illustrated)
		56546	Screw			2	(not illustrated)
		55475	Nut, self-locking fiber			2	(not illustrated)
54	35280-501		Sector Gear Assembly			1	
55		50994	Bolt, drilled shank			1	
56		58860	Washer			3	
57		56631	Screw			5	
58		81150	Pinion			1	
59		53101	Bolt			1	
60	30917-002	30020	Spacer			AR	
61		50126	Bolt, undrilled shank			2	
62		55400	Nut, self-locking fiber			3	
63		60865	Nylon Washer			2	
64		55387	Nut, self-locking fiber			1	

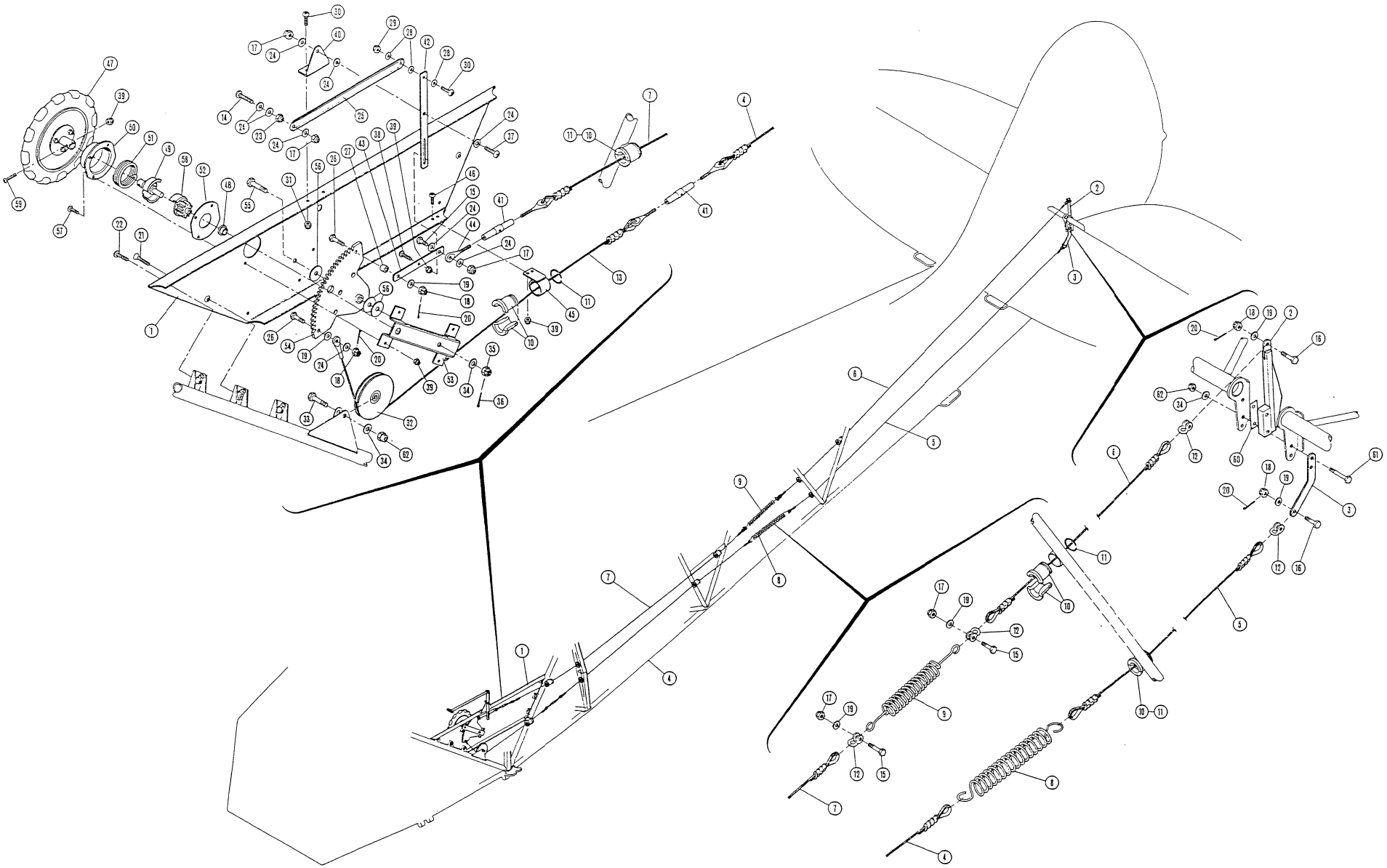

FIGURE 12: TRIM CONTROL SYSTEM

FIGURE 13: Rudder Control System, A-1C 200

ITEM	PART NUMBER	CODE NUMBER	DESCRIPTION	LH	RH	TOTAL QTY	SERIAL EFFECTIVITY
1	31085-507		Cable Assembly;, Rudder Fwd	1	1	2	
2	30508-005		Link, Rudder Spring	2	2	4	
3	30730-501		Rudder Pedal Assembly	2	2	4	
4	31085-506		Cable Assembly;, Rudder Aft	1	1	2	
5		61300	Bushing, Fairlead (half)	10	10	20	
6		63007	Spring, Extension	1	1	2	
7		50250	Bollt, drilled shank	2	2	4	
8		58740	Washer	5	5	10	
9		54375	Nut, castle	5	5	10	
10		55675	Cotter Pin	5	5	10	
11		50675	Bolt, drilled shank	2	2	4	
12		50050	Bolt, drilled shank	1	1	2	
13		60873	Ring, Fairlead Snap``	5	5	10	
14		81705	Spring	1	1	2	
15	35511-001		Link, Rudder Spring	1	1	2	
16		56855	Screw	1	1	2	
17	35541-501		Rudder Return Spring Assy		1	1	

FIGURE 13: RUDDER CONTROL SYSTEM

FIGURE 14: Aileron Control System, A-1C 200

ITEM	PART NUMBER	CODE NO.	DESCRIPTION	LH	RH	TOTAL QTY	SERIAL EFFECTIVITY
1		53975	Barrel, Turnbuckle			3	
2		54080	Fork, Turnbulkle			2	
3		62576	Pulley			6	
4		50051	Bolt, undrilled shank			6	
5		50025	Bolt, drilled shank			2	
6		54375	Nut, castle head			8	
7		58740	Washer			22	
8		55675	Cotter Pin```			14	
9		81430	Bushing			6	
10		55601	Nut, self-locking fiber			12	
11	35189-501		Fairlead Bracket Assembly			4	
12		62668	Rivet, Cherry			12	
13		61300	Bushing, Fairlead half			20	
14		60873	Ring, Fairlead Snap			10	
15		81225	Bracket Assembly, Pulley			2	
16		62578	Pulley			4	
17		81215	Pulley Housing			4	
18		81210	Bracket, Pulley Housing			2	
		81680	Bracket, Pulley Housing - Stainless Steel			2	
19		81220	Bushing			2	
20		50125	Bolt, drilled shank			4	
21		56070	Clevis Pin			4	
22		58780	Washer			8	
23		55750	Cotter Pin			2	
24		51726	Bolt, drilled shank			2	
25		54425	Nut, castle			2	
26		81680	Bracket, Pulley Housing			2	
27		81355	Fitting, Spacer			2	
28		51825	Bolt, undrilled shank			2	
29		55425	Nut, self-locking fiber			2	
30	31085-513		Cable Assembly (left wing)			1	
	31085-514		Cable Assembly (right wing)			1	
31		53800	Thimble, Cable			2	
32		62271	Sleeve, Cable Swaging			2	
33	31085-515		Cable Assembly (both wings)			2	
34	35217-001		Bracket, Aileron Pulley (left wing)			1	
	35217-002		Bracket, Aileron Pulley (fight wing)			1	
35		50026	Bolt, undrilled shank			2	
36		50050	Bolt, drilled shank			4	
37		62671	Rivet, Cherry			6	
38	35222-501		Fairlead Bracket Assembly			2	
39		56833	Screw			4	
40		81680	Bracket, Pulley Guard			2	
41	35566-001		Aileron Control Seals				(not illustrated)

FIGURE 14: AILERON CONTROL SYSTEM

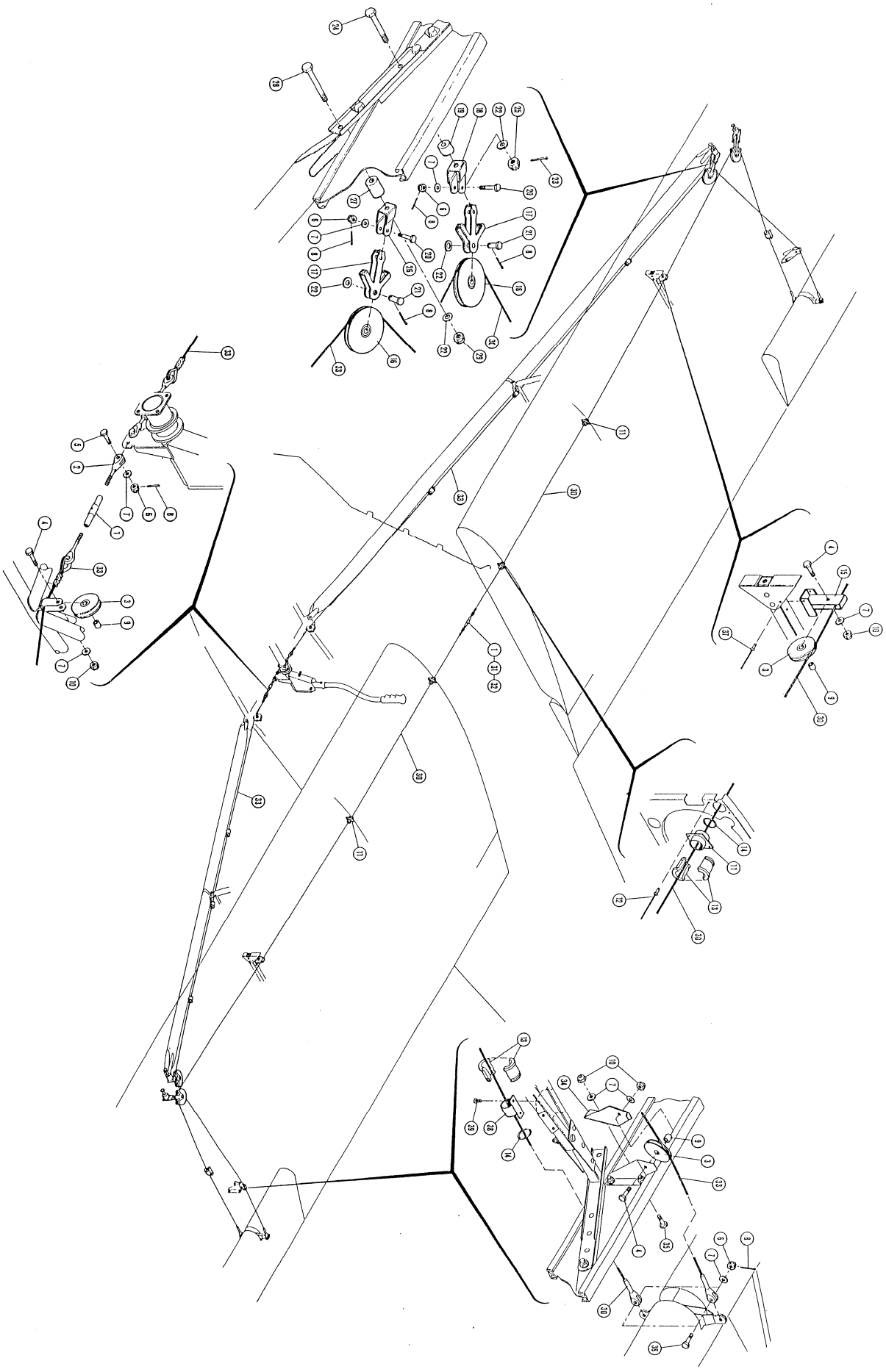

FIGURE 15: Flap Control System, A-1C 200

ITEM	PART NUMBER	STOCK NUMBER	DESCRIPTION	LH	RH	TOTAL QTY	SERIAL EFFECTIVITY
1	35247-503		Flap Lever Control Assembly			1	
2	30509-010		Tube, Precision			1	
3		55775	Cotter Pin			1	
4	35128-002		Ratchet, Flap Lever			1	
5		79105	Bushing, Spacer			2	
6	31085-510		Cable Assembly, Flap Control Fwd			1	
7	35064-001		Link, Flap Control			1	
8	31085-511		Cable Assembly (both wings)	1	1	2	
9		62577	Pulley			7	
10	35168-501		Flap Bellcrank Assembly, LH (w/bearing)	1		1	
10	35168-502		Flap Bellcrank Assembly, RH (w/bearing)		1	1	
11		81280	Flap Actuator Rod Assy			2	
12	35109-001		Block, Flap Acuator			2	
13	35248-001		Bracket, Flap Spring Attaach			2	
14		50026	Bolt, undrilled shank			1	
15		51301	Bolt, undrilled shank			1	
16		58740	Washer			20	
		58750	Washer			3	
17		55392	Nut, self-locking metal			4	
18		50176	Bolt, undrilled shank			1	
19		50050	Bolt, drilled shank			3	
20		54375	Nut, Castle			12	
21		55675	Cotter Pin			16	
22		50076	Bolt, drilled shank			6	
23		50997	Bolt, undrilled shank			2	(top rear)
		51076	Bolt, undrilled shank			2	(left side only)
		51126	Bolt, undrilled shank			2	(top , front)
		51151	Bolt, undrilled shank			1	(bottom - rear)
24		58760	Washer			24	
25		55400	Nut, self-locking			8	
26		51250	Bolt, drilled shank			2	
27		54400	Nut, Castle			2	
28		60100	Bearing			2	
29	30504-087		Tube			2	
30		50200	Bolt, drilled shank			2	
31		54080	Fork, turnbuckle			2	
32		53975	Barrel, turnbuckle			2	
33		81475	Spring, Flap Return			2	
34		54575	Nut, Jam			2	
35		61300	Bushing, Fairlead (half)			4	
36		60873	Ring, Fairlead Snap			2	
37		60107	Bearing			4	
38	35103-001		Button, Flap Lever			1	
39		63027	Spring			1	
40	30146-028		Washer			1	

FIGURE 15: Flap Control System, A-1C 200

ITEM	PART NUMBER	STOCK NUMBER	DESCRIPTION	LH	RH	TOTAL QTY	SERIAL EFFECTIVITY
41	35104-501		Flap Lever Rod Assembly			1	
42		59146	Screw, type A			2	
43		55146	Pin, Clevis			1	
44	35102-002		Pawl, Flap Lever			1	
45		53111	Clevis Bolt			1	
46	30504-102		Tube			1	
47		82150	Hinge Pad Material			AR	(not illustrated)

FIGURE 15: FLAP CONTROL SYSTEM

FIGURE 16: Landing Gear Installation, A-1C 200

ITEM	PART NUMBER	STOCK NUMBER	DESCRIPTION	LH	RH	TOTAL QTY	SERIAL EFFECTIVITY
1	30731-501		Brake Pedal Assembly, Rear (left side)	1		1	
	30731-502		Brake Pedal Assembly, Rear (right side)		1	1	
2	30731-503		Brake Pedal Assembly, Front (left side)	1		1	
			Brake Pedal Assembly, Front (right side)		1	1	
3		50650	Bolt, drilled shank	2	2	4	
4		54375	Nut, Castle	6	6	12	
5		58740	Washer	8	8	16	
6		55675	Cotter Pin	6	6	12	
7		62990	Shock Cord Ring	3	3	6	
8	35341-001		Stop, Rudder Gear	1	1	2	
	1-0231-026		Pin	2	2	4	
9	35342-001		Fairing, Inner Landing Gear LH	1		1	
	35342-002		Fairing, Inner Landing Gear RH		1	1	
10		62865	Master Cylinder	1	1	2	
		62862	Repair Kit			AR	
		62863	O-Ring, Bottom			AR	
		62864	Seal, Upper			AR	
		62866	U-Cap, linear			AR	
11	45017-501		Landing Gear Strut Assy, LH	1		1	STD
	45017-502		Landing Gear Strut Assy, RH		1	1	STD
12	30655-010		Tie Rod, Threaded	1	1	2	
13		54548	Nut, Jam	2	2	4	
14		56940	Terminal, Tie Rod	2	2	4	
15		81542	Tailwheel Assembly, bushwheel			1	STD
		81543	Tailwheel Assembly, baby bushwheel			opt	opt
16		52880	Bolt, drilled shank			1	
17	35345-501		Bungee Cover Assy, LH	1		1	
			Bungee Cover Assy, RH		1	1	
18		50003	Bolt, undrilled shank	4	4	8	
		60870	Washer, nylon	4	4	8	
19		55625	Nut, self-locking Anchor	4	4	8	
20	35346-001		Cover, Landing Gear LH	1		1	
	35346-002		Cover, Landing Gear RH		1	1	
21	35347-001		Filler, Landing Gear Cover	1	1	2	
22		60399	Brake Assembly, Cleveland	1	1	2	
		60405	Brake Lining	4	4	8	
		60410	Rivet, Brake Lining	12	12	24	
23		50851	Bolt, undrilled shank	4	4	8	
24		55400	Nut, self-locking fiber	5	5	10	
25	35504-001		Reinforcement, Landing Gear L.E.	1	1	2	
26		82635	Tire, 8:50 x 6			std	Hartzell 80 and MTV props

FIGURE 16: Landing Gear Installation, A-1C 200

ITEM	PART NUMBER	STOCK NUMBER	DESCRIPTION	LH	RH	TOTAL QTY	SERIAL EFFECTIVITY
27		63953	Wheel Assembly, Cleveland # 40-60				
28		82640	Tube: 8:50 x 6			std	Hartzell 80 and MTV props
29		60014	Nut, large castle	1	1	2	
30		55870	Cotter	1	1	2	
31		81695	Tube, Spacer	1	1	2	
32		81645	Spacer, Wheel	1	1	2	
33		40022	Hose Assembly	1	1	2	
34		57565	Union, Flared Tube	1	1	2	
35		57770	Elbow, 90 degree	2	2	4	
36	35344-501		Brake Line Assembly	1	1	2	
37		57395	Clamp, cushioned (lwr)	1	1	2	
		57411	Clamp, cushioned (upr)	1	1	2	
38		56850	Screw	1	1	2	
39		55601	Nut, self-locking fiber	1	1	2	
40		81865	Hose Assembly	1	1	2	
41		58054	Elbow, Bulkhead 45 degree	1	1	2	
42		58390	Nut, bulkhead	1	1	2	
43		58800	Washer	2	2	4	
44		52625	Bolt, drillled shank	2	2	4	
45		54450	Nut, castle	2	2	4	
46		55750	Cotter Pin	2	2	4	
47		58790	Washer	5	5	10	
48		62669	Rivet, pull-stem	13	12	25	
49	37319-011		Spring Assy, Tailwheel (5 leaf)			1	
50		58760	Washer			6	
51		51175	Bolt, undrilled shank			2	
52	37800-001		Bracket Assy, Tailwheel Spring			1	
53		52512	Bolt, drilled shank			1	
54		55450	Nut, castle			1	
55		58800	Washer			1	
56		54475	Nut, castle			1	
57		50075	Bolt, drilled shank			4	
58	35500-001		Fairing, L.E. Landing Gear (left side)	1		1	
	35500-002		Fairing, L.E. Landing Gear (right side)		1	1	
59	35394-001		Fairing, Outer Landing Gear (left side)	1		1	
	35394-002		Fairing, Outer Landing Gear (right side)		1	1	
60		59174	Screw, PK	16	16	32	
62		81545	Bushing, Tailwheel			1	
63		63015	Spring, Tailwheel			1	
		63016	Clip, Tailwheel Spring			AR	
64		40149	Channel, D Rubber			3 ft	

FIGURE 16: Landing Gear Installation, A-1C 200

ITEM	PART NUMBER	STOCK NUMBER	DESCRIPTION	LH	RH	TOTAL QTY	SERIAL EFFECTIVITY
65	35517-501		Step Assemby			1	
66	2-2122-501		Clamp			1	
		50902	Bolt, undrilled shank			1	
		58760	Washer			1	
		55400	Nut, self-locking fiber			1	
67	37527-001		Cable, Gear Safety	1	1	2	
		62272	Nicopress Sleeve, 3/16	2	2	4	
68		81661	Dust Shield, Stainless Steel			2	
		56833	Screw	3	3	6	
		58622	Washer, tooth locking	3	3	6	

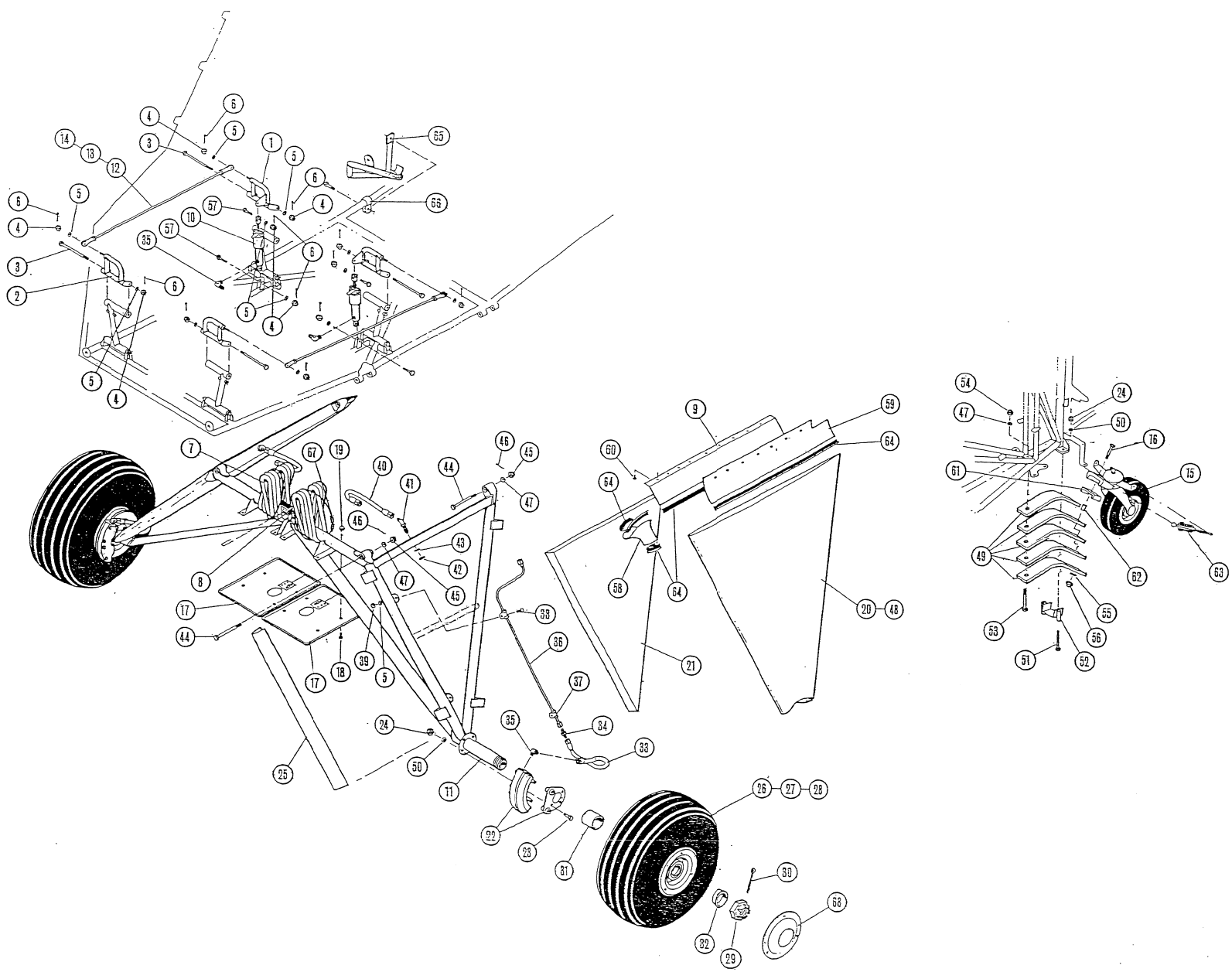

FIGURE 16 - Landing Gear Installation

FIGURE 17 - Fuel System Installation, A-1C 200

ITEM	PART NUMBER	STOCK NUMBER	VENDOR NUMBER	DESCRIPTION	LEFT SIDE	RIGHT SIDE	TOTAL QTY
1	35215-501			Fuel Tank Assembly, left wing	1		1
	35215-502			Fuel Tank Assembly, right wing		1	1
2	35270-501			Fuel Line Assy (left upr fwd-fuse)	1		1
3	35270-502			Fuel Line Assy (right upr fwd-fuse)		1	1
4	35270-503			Fuel Line Assy (left upr rear, fuse)	1		1
5	35270-504			Fuel Line Assy (right upr rear, fuse)		1	1
6	35270-505			Fuel Line Assy (tube, fuel carry-thru)			1
7	35270-506			Fuel Line Assy (lower aft supply, fuse)			1
8	35270-507			Fuel Line Assy (lower mid supply, fuse)			1
9	35270-508			Fuel Line Assy (at fwd tee)			1
10	35270-509			Fuel Line Assy (lower fwd supply, fuse)			1
11	35071-001			Tee, Fuel Line (aft divider block)			1
12	35239-001			Strap, Fuel Tank Top	2	2	4
13	35281-501			Fuel Vent Line Assembly	1	1	2
14	35268-501			Gascolator Bracket Assembly			1
15		81760		Hose Assembly	1		1
16		81755		Hose Assembly		1	1
17		63921		Shut-Off Valve	1		1
18	2-6510-016			Channel, Sight Gauge	1	1	2
19		57615		Nipple			4
20		58061		Adapter			6
21		57408		Clamp, cushioned			9
22		56850		Screw			9
23		55392		Nut, self-locking			17
24		57570		Union			1
25		57411		Clamp, Cushioned			4
26		57421		Clamp, Cushioned			1
27	35461-002			Hose, Fuel Line			4
28		58048		Tee			1
29		58815		Washer			4
30		58400		Nut, Bulkhead			3
31		50201		Bolt, undrilled			2
32		58740		Washer			6
33		63200		Finger Strainer			4
34	35238-501			Strap, Fuel Tank Bottom Aft	2	2	4
35	35238-502			Strap, Fuel Tank Bottom Fwd	2	2	4
36	35237-001			Strip, Fuel Tank Anti-Chafe -lower	4	4	8
37	35237-002			Strip, Fuel Tank Anti-Chafe - upper	2	2	4
38		50851		Bolt, undrilled			10
39		58860		Washer			10
40		55400		Nut, self-locking			12
41		50400		Nut, self-locking			4
42		60860		Clamp			16
43		81690		Gacolator Assembly			1
44		57950		Tee			1
45		50026		Bolt, undrilled			2
46		58850		Washer			2
47		58289		Plug (top of gascolator)			1

FIGURE 17 - Fuel System Installation, A-1C 200

ITEM	PART NUMBER	STOCK NUMBER	VENDOR NUMBER	DESCRIPTION	LEFT SIDE	RIGHT SIDE	TOTAL QTY
48		57955		Elbow 45 degree, steel			3
49		58030		Union, blkhd			1
50		50880		Bolt, undrilled			2
51		58760		Washer			4
52	35266-002			Tube, flexible (sight gauge)			2
53		58059		Hose Nipple			4
54		81810		Flush Cup Fuel Sampler			2
55		59146		Screw, PK			4
56	35461-001			Hose, Fuel Line			2
57		81855		Hose Assy -			1
58	35281-501			Fuel Vent Line Assy - outboard	1	1	2
59		62545		Boost Pump, Fuel			1
60	35127-001			Bracket, Pitot Line			4
61		62668		Rivet, blind open end			8
62		61494		Nipple, Tubing			2
63		81465		Check Valve			1
64	35232-001			Bracket, Fuel Tank Attach			4
65	35233-001			Bracket, Fuel Tank Attach			4
66	35237-003			Strip, Fuel Tank Anti-Chafe			4
67	35237-004			Strip, Fuel Tank Anti-Chafe			4
68		62663		Rivet, blind open end			72
69	35266-001			Tube, flexible			4
70		81255		Drag Brace Tube			2
71	35512-031	81936		Placard, Sight Gauge RH		1	1
	35512-035	81935		Placard, Sight Gauge LH	1		1
72		58368		Reducer			1
73	35266-009			Tube, flexible	4	4	8
74		65006		Strap, self-locking	4	4	8
75		59469		Clamp, loop - Umpco	2	2	4
76		56834		Screw	2	2	4
77		55550		Nut, self-locking	2	2	4
78		60840		Clamp, Worm			2
79	45265-503			Bracket Assembly, Boost Pump			1
80		57750		Elbow, 90 degree			1
81		40041		Hose Assy -			1
82		58450		Grommet			1
83		65941		O-Ring			2
84		58325		Tee, internal thread			1
85		58230		Nipple, pipe thread			1
86		58248		Bushing, reducer			1
87		57940		Elbow 45 degree			1
88		61428		Cap, fuel tank			2
89		58025		Union, blkhd Tube			3
90		81691		Gasket, Gascolator (replacement part)			A/R
91		81810		Flush cap Sampler			opt
92	35474-001			Forward Shims			3

FIGURE 17 - Fuel System Installation, A-1C 200

ITEM	PART NUMBER	STOCK NUMBER	VENDOR NUMBER	DESCRIPTION	LEFT SIDE	RIGHT SIDE	TOTAL QTY
93		40049		Hose Assy -			1
94		58056		Elbow, Blkhd 45 degree			1
95		58039		Elbow, Blkhd 90 degree			1
96		40052		Hose Assy -			1
97		57950		Elbow, 45 degree			1
98		81865		Hose Assy -			1
99		57770		Elbow, 90 degree			1
100	35628-501			Handle, Fuel Valve (furn w/valve)			1
101		63926		Quick Drain			1
102	2-6500-024			Washer Assembly			1
103		89226		Fuel Flow Transducer			1
104		40088		Hose Assembly			1
105		40089		Hose Assembly			1
106		40026		Hose Assembly			1
107		57615		Nipple			1
108		57921		Elbow			1
109		58230		Nipple			2
110		58248		Bushing, Reducer			1
111		57922		Elbow, 90 degree			1
112		58325		Tee			1
113	45395-034			Strap			1
114		61194		Restrictor Fitting, Lyc			1
115		61487		Fitting, tubing			1
116		50003		Bolt, undrilled			1
		55392		Nut, self-locking			1
118		60801		Clamp, Worm Drive -			2
119		60802		Clamp, Worm Drive -			2
120		60804		Clamp, Worm Drive -			2
121		57442		Clamp, Cushioned			2

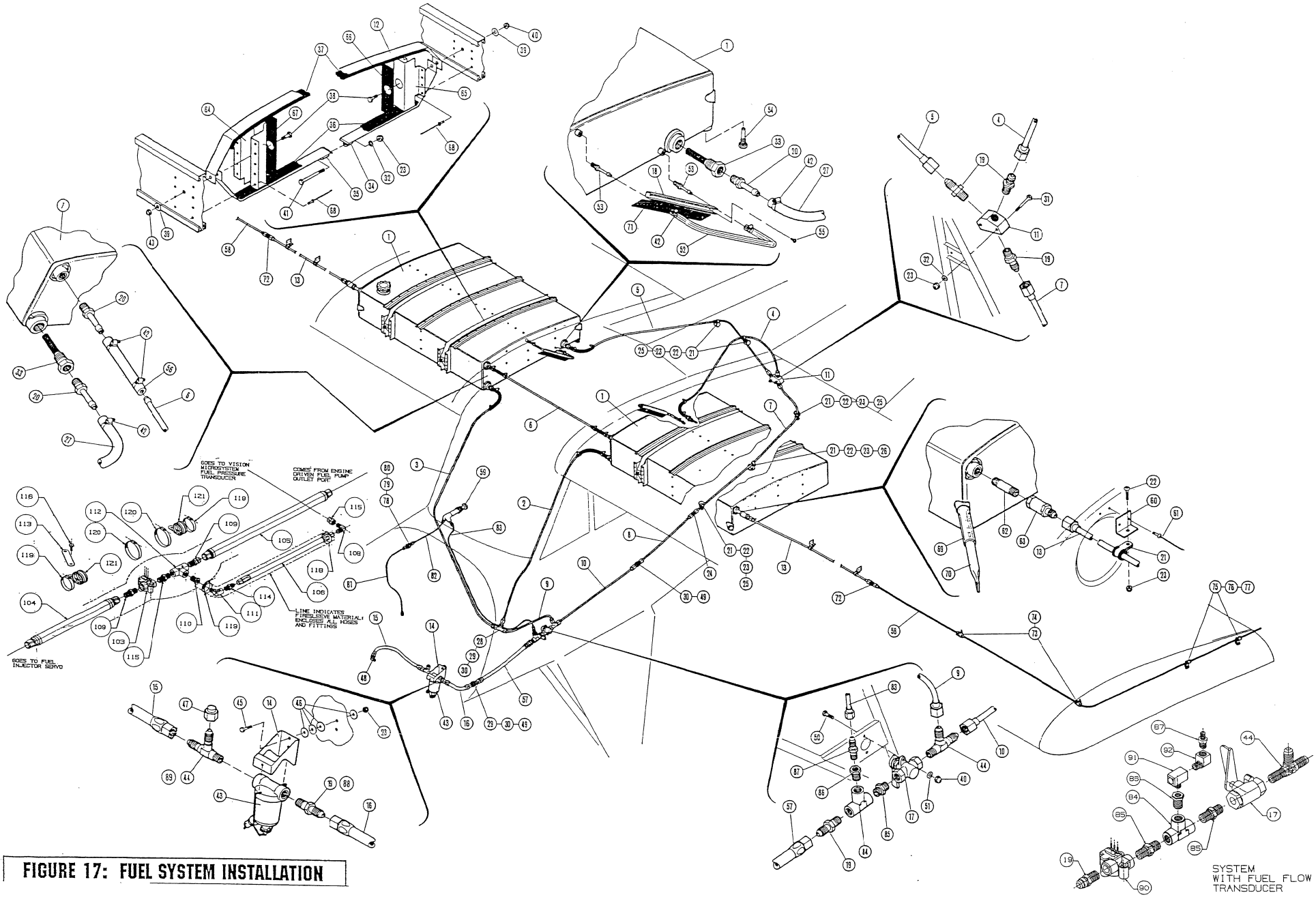

FIGURE 17: FUEL SYSTEM INSTALLATION

Figure 18 - Instrument Installation, A-1C 200

ITEM	PART NUMBER	CODE NO.	DESCRIPTION	STD PNL	VM-1000	SERIAL EFFECTIVITY
1		81713	Airspeed Indicator	1	1	
2		61786	Altimeter	1	1	
3		61943	Oil Pressure / Oil Temperature Gauge	1	NR	
4		81708	Tachometer, use w/ 80" composite prop		1	STD
		81706	Tachometer, use w/ MT prop		AR	OPT
5		61941	Manifold Pressure / Fuel Flow Gauge		1	
6	35427-001		Cover, Instrument Panel Hole (2-1/4 Dia)	A/R		
7	35427-002		Cover, Instrument Panel Hole (3-1/8 Dia)	A/R		
8	35416-001		Bracket, Alternate Air		1	
9		56586	Screw, brass		53	
		81715	Post Lights	A/R	10	(optional)
10		55476	Nut, Brass self-locking		13	
11	2-4125-017		Valve, Alternate Static		1	
12		57760	Elbow		1	
13	35417-501		Alternate Air Tube Assembly		1	
14	35266-007		Tube, flexible vinyl		1	
15	35266-008		Tube, flexible vinyl		2	
16	35266-006		Tube, flexible vinyl		1	
17		49556	Tee, Poly		3	
18		49529	Elbow, Poly		2	
19		57938	Elbow, 45 degree (mani/press)		NR	(w/mani/press)
20	35418-501		Oil Pressure Line Assembly		NR	
21	35419-501		Manifold Pressure Line Assembly		NR	(w/mani/press)
22		58465	Grommet		2	
23	35420-001		Bracket, compass		1	
24		61375	Compass, magnetic		1	
25	35188-501		Pitot Line Assembly		2	
26		57390	Clamp, cushioned		14	
27		56850	Screw		9	
28		55601	Nut, self-locking fiber		11	
29	30762-001		Mount, Pitot/Static System			
	35767-002		Clamp, Pitot Extension Clamp		1	heated pitot
	35767-001		Body, Pitot Extension Clamp		1	heated pitot
		59216	Screw,		4	heated pitot
		56835	Screw		6	heated pitot
30	35768-001		Pitot Extension Tube		1	
31	30763-501		Tube Assembly, pitot			
		33528	Pitot Static Tube, PST 300-4C		1	heated pitot
	35765-001		Access Panel		1	heated pitot
	35764-001		Bracket, Front - Access Panel		1	heated pitot
	35763-001		Bracket, Rear - Access Panel		1	heated pitot
		56850	Washer		2	heated pitot
		50003	Bolt, AN3-4A Bolt		2	heated pitot
		55611	Nut, Miniture Anchor -		8	heated pitot

Figure 18 - Instrument Installation, A-1C 200

32	30764-001	31450	Nut, Pitot/Static System		1	
33		57595	Nipple		2	
34		58850	Washer		2	
35		50026	Bolt, undrilled shank		2	
36		65003	Strap, self-lock		AR	
37	35218-501		Instrument Panel		NR	(ref item 75)
38		61730	Cylinder Head Temperature		NR	(in VM-1000)
39		56835	Screw		NR	cyl hd temp
40		55550	Nut, self-locking fiber		NR	cyl hd temp
41	35127-001		Bracket, Pitot Line		1	
42		62668	Rivet, Blind Open End		14	
43		58012	Union, Tube Bullkhead		1	
44		58380	Nut, Flared Tube Bulkhead		1	
45		58860	Washer, large Area		1	
46		57933	Elbow, 45 degree		1	
47		82000	Manifold Press Hose Assembly		1	
48		58036	Elbow, 90 degree Bulkhead		1	
49		58390	Nut, Flared Tube Bulkhead		1	
50		58850	Washer, large Area		2	
51		81750	Oil Pressure Hose Assy		1	
52		57605	Nipple		1	
53	2-7009-010		Adapter, Oil Pressure Elbow		NR	
	2-6500-005		Adapter, Oil Temperature (not shown)		NR	
54		58740	Washer		1	
55		58440	Grommet		1	
56	35218-002		Instrument Panel		1	
57		82225	Shock Mounts		10	
58		58622	Washer, Star Tooth		10	
59		55020	Nut, coarse plain Hex		10	
60		82230	Nut, Acorn		10	
61		82625	Outside Air Gauge (not shown)		1	
63		82295	Artificial Horizon		1	
		57950	Elbow, 45 degree		1	
		58059	Adapter, brass		1	
64		82294	Rate of Climb Gauge		1	
		57605	Nipple		1	
		65810	Quad Ring		1	
		61487	Coupling, Weatherhead (or equivalent)		1	
		49556	Tee, Poly		1	
65		82300	Directional Gyro		1	
		57950	Elbow, 45 degree		2	
66		82355	Turn Indicator		1	

FIGURE 18: INSTRUMENTS INSTALLATION

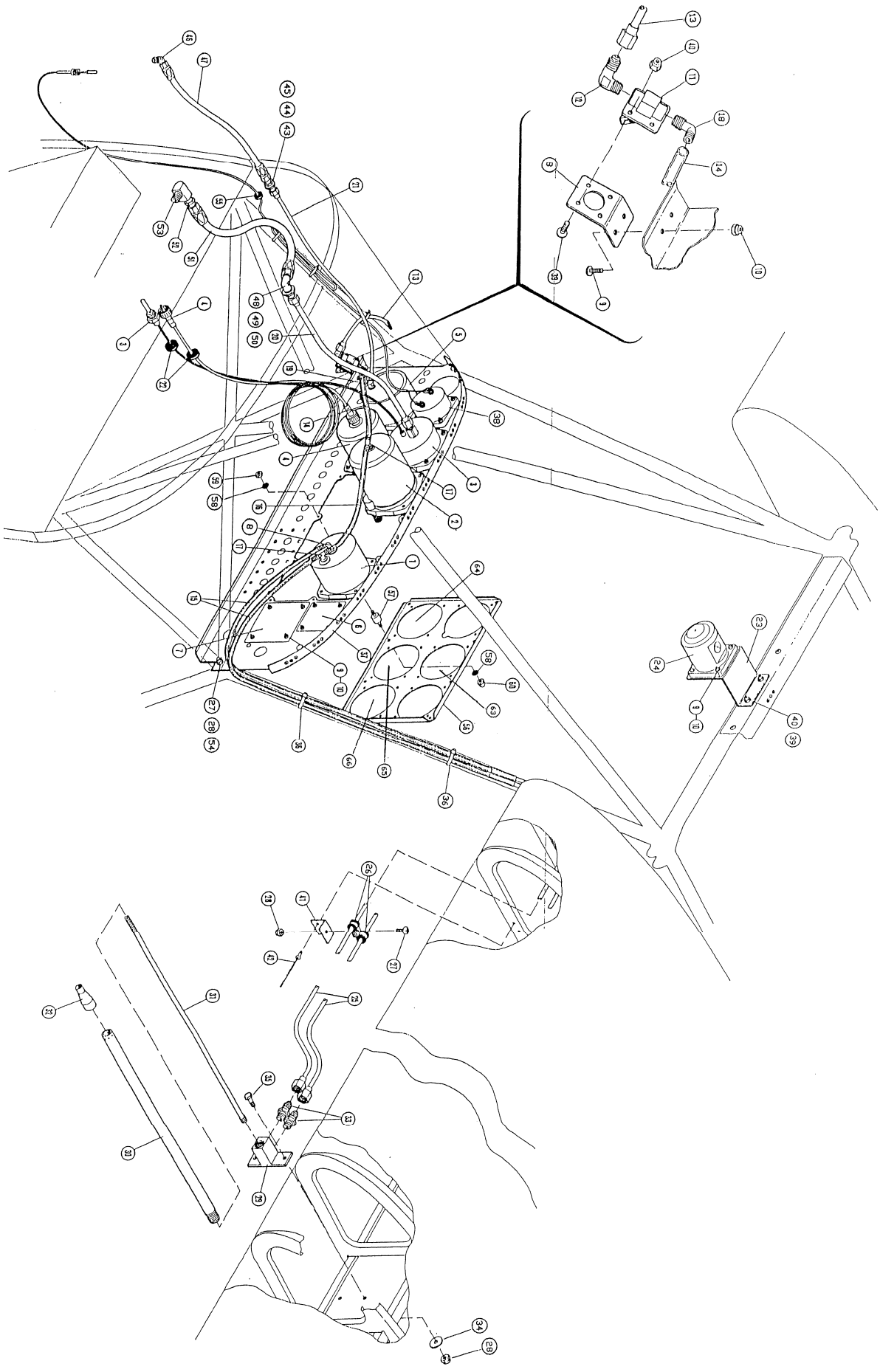

FIGURE 18(A) - Instrument Installation, A-1C 200 optional

ITEM	PART NUMBER	CODE NUMBER	DESCRIPTION	TOTAL QTY	SER EFF or Usage
1		63335	Ignition Switch	1	
2		63341	Toggle Switch	5	
3	37219-010		Doubler	1	
4	37219-003		Circuit Breaker Panel	1	
5		56583	Screw, brass	8	
6		82086	Placard - Main Circuit Breaker Panel	1	
7		60435	Circuit Breaker, 1 amp	2	(egt/cht/oat - Bose.)
		60437	Circuit Breaker, 2 amp	4	(stall warn - encoder - T & B - aux power)
		60453	Circuit Breaker, 3 amp	2	(Eng. Inst. - txp)
		60440	Circuit Breaker, 5 amp	5	(alt fld - starter - Inst lt - audio - gps)
		60442	Circuit Breaker, 6 amp	AR	
		60443	Circuit Breaker, 7 amp	2	(Nav lt. - Strobe lt.)
		60445	Circuit Breaker, 10 amp	1	(Nav. Com.)
		82650	Circuit Breaker, 20 amp	1	(Taxi/Lndg lt.)
		60467	Circuit Breaker, 60 amp	AR	
		60479	Circuit Breaket, 70 amp	1	(alternator)
8		82994	Rate of Climb Instanteous	1	
9		56583	Screw, brass	26	
10		59485	Platenut	22	
11		82300	Gyro, Directional	1	
13		82355	Turn Coordinator	1	
16		82305	Suction Gage	1	
17		89199	VM-1000, used with 80 in prop	1	
		89241	VM-1000, used with MT prop	1	
20		82088	Placard - Mixture Pull for Lean	1	
21		82089	Placard - Propeller Push for Hi RPM	1	
22		82098	Aux Power 12v DC/2amp	1	
25		81958	Placard - Design Maneuvering Speed 113 MPH IAS	1	
26		81907	Placard - Demonstrated Crosswind 15 MPH	1	
27		81713	Air Speed Indicator United Instrument	1	
30		82093	Placard, Alternator	1	upper half of -062
31			Placard, Trip Field/Low Output		lower half of -062
32		30727	Warning Lights bulbs	3	
		63501	Cover	3	
		63503	Base	3	
33		82087	Placard - Oil Pressure	1	
34		82295	Artificial Horizon	1	
38		61786	Altimeter	1	

FIGURE 18(A) - Instrument Installation, A-1C 200 optional

ITEM	PART NUMBER	CODE NUMBER	DESCRIPTION	TOTAL QTY	SER EFF or Usage
39		82605	Chronometer	1	
40		81903	Placard - Solo Front Seat Only	1	
41		81916	Placard - No smoking	1	
42	35218-002		Sub-Panel, Instrument	1	
43	37219-001		Panel Assy, Instrument	opt	(VM-1000 with Garmin 430)
	37220-001		Panel Assy, Instrument	opt	(VM-1000 with Garmin 530)
44		61728	CHT/EGT Gauge	1	std
		88653	EGT/CHT/OAT Gauge		opt
		82311	OAT Gauge		opt
45		82090	Placard - Pull for Cabin Heat	1	
46		82091	Placard - Pull for Cabin Air	1	
47		81954	Placard - Switches	1	
48		57421	Clamp, Cushioned	1	
49		57416	Clamp, Cushioned	1	
50		56910	Screw	1	
51	1-0440-039		Bushing	1	
52		58740	Washer	1	
53		55392	Nut, self-locking	1	
54	35219-011		Spacer	2	
55		82798	GI 106A - C.D.I.	1	
56		82260	Primer Pump	1	
	35270-510		Fuel Line Assy - (tee to primer pump)	1	
57		88670	GNS 530 - GPS Unit	opt	opt
		82795	GNS 430 - GPS Unit	1	std
58		82793	GMA 340 Audio Panel	1	
59		88602	GTX 327 Transponder (digital)	1	std
		88675	GTX 330 Transponder (digital)	opt	(opt or European)
		88675	GTX 330 Transponder (digital)	opt	(located under dash when used with 530 GPS)
60		63346	Toggle Switch, 3 position	1	(Indg/taxi lights)
61		82655	Toggle Switch, on/off	1	(avionics master)

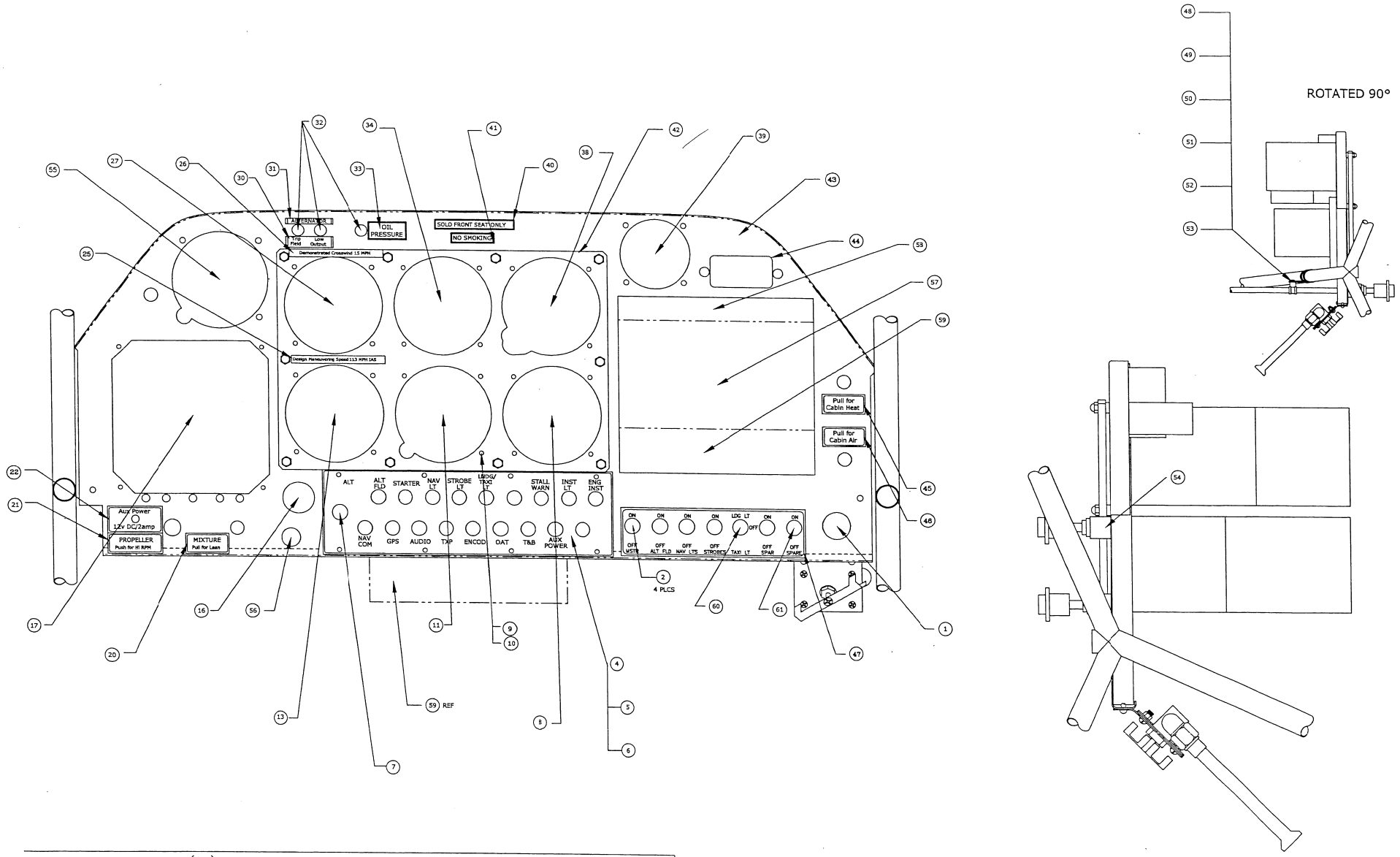

FIGURE 18 (A) – Instrument Installation

FIGURE 19 - Electrical System Installation, A-1C 200

ITEM	PART NUMBER	CODE NUMBER	DESCRIPTION	TOTAL QTY	SERIAL EFFECTIVITY
1		57408	Clamp, cushioned	1	
2		56850	Screw, fillister head	8	
3		55601	Nut, self-locking	12	
4		81595	Power Supply	1	
5		55850	Large Area Washer	4	
6		61652	Horn, Stall Warning	1	
7		57421	Clamp, cushioned	2	
8		56799	Screw, fillister head	2	
9		55550	Nut, self-locking	2	
10		57411	Clamp, cushioned	1	
11		61235	Regulator, Voltage	1	
12		50101	Bolt, undrilled shank	4	
13		58465	Grommet	4	
14	35540-001		Plate, ELT Mounting	1	
15		81580	Light, Cockpit Spot - red	1	
16		80575	Light, Cockpit Spot - clear	1	
17		63341	Switch, Toggle	8	
18		60705	Ammeter	1	
19		63335	Switch, Ignition	1	
20		63501	Light Indicator - Red	1	
21		63502	Light Indicator - Amber	1	
		30727	Bulb, minature	AR	
22		80422	Cover, Terminal	6	
23		60440	Circuit Breaker, 5 amp	3	
none		60435	Circuit Breaker, 1 amp	AR	
24		60437	Circuit Breaker, 2 amp	1	
25		60450	Circuit Breaker, 50 amp	1	
26		60442	Circuit Breaker, 6 amp	1	
27		60443	Circuit Breaker, 7 amp	2	
28		60445	Circuit Breaker, 10 amp	2	
29	35396-001		Buss Bar	1	
30		58525	Grommet, elastic	3	
31		65003	Strap, self-locking	AR	
32		50826	Bolt, undrilled shank	5	
33		55400	Nut, self-locking fiber	7	
34		50902	Bolt, undrilled shank	2	
35		60423	Cover, Terminal	2	
36		60421	Cover, Terminal	2	
37		63345	Solenoid, master	1	
38		63342	Switch, solenoid - starter	1	
39	35335-005		Bracket, Battery Hold-Down	1	

FIGURE 19 - Electrical System Installation, A-1C 200

40	35334-501		Battery Support Assembly	1	
41		60066	Battery, Concorde RG-25	1	
42	35386-001		Rod, Battery Hold-Down	2	
43		62326	Nut, Hex	4	
44		62327	Nut, Wing	2	
45		58860	Washer	2	
46		61600	Light, Wingtip Strobe (green, right wing)	1	
47		61605	Light, Wingtip Strobe (red, left wing)	1	
		61606	Bulb, Strobe Light - 12 volt	AR	
48		61103	Stall Warning Detector	1	
49		81395	Landing Light Kit	1	
50		81405	Bulb, Landing Light	2	
51		56654	Screw	4	
52		56547	Screw	2	
53		59174	Screw, PK	4	
54		81570	Light, Tail	1	
		91038	Bulb, minature	AR	
55		80063	Emergency Location Transmitter	1	
		80062	Battery, for ELT	AR	
56		56558	Screw	3	
57		55620	Nut, Anchor	3	
58		62668	Rivet, Blind Open End	4	
59	37322-901 MDC		Wire Harness Assy	1	
60	35075-503		Dimmer Switch Assembly	1	
		80170	Potentiometer (furn w/switch assy)	AR	
61		62120	Knob, potentiometer	1	

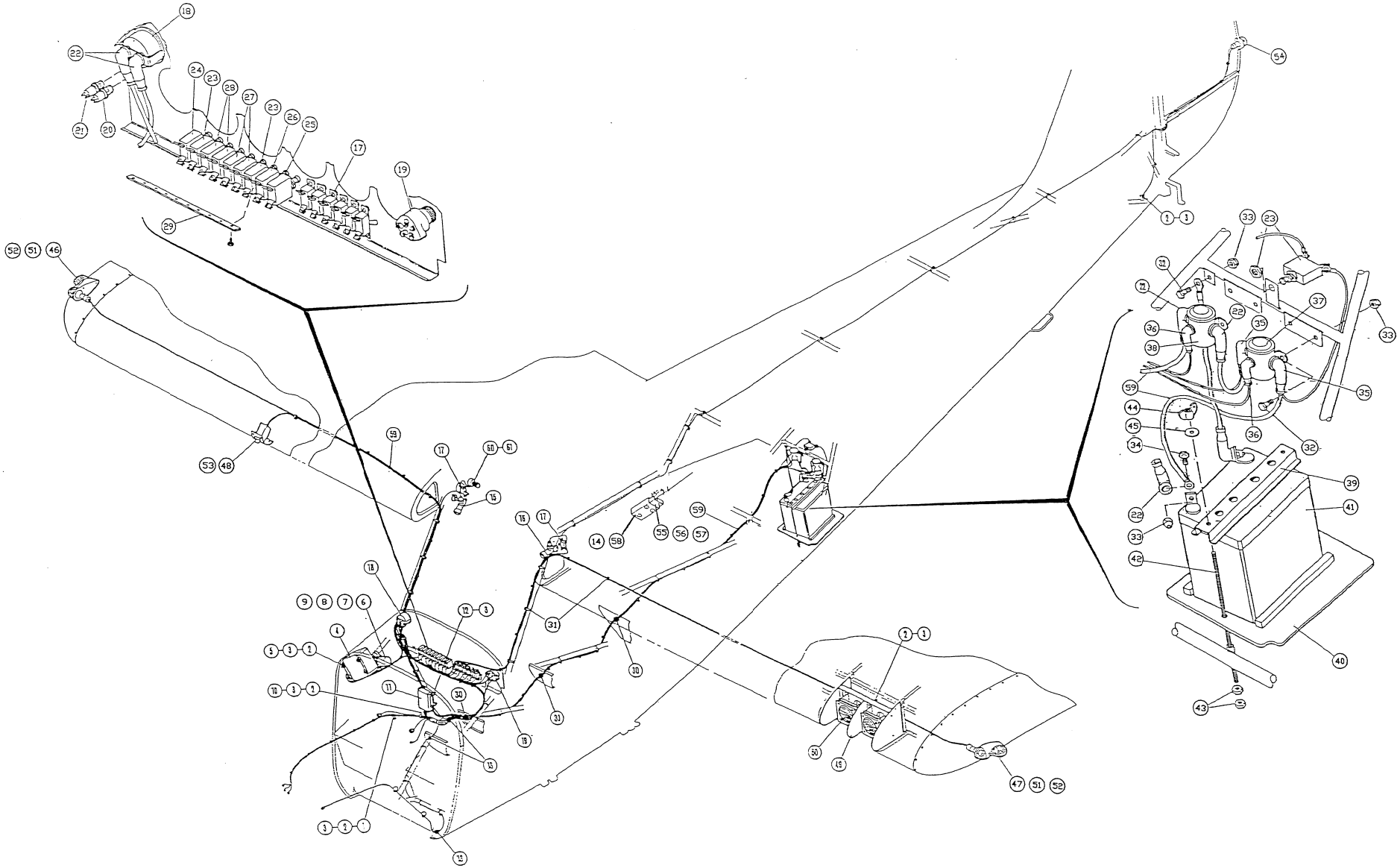

FIGURE 19 - ELECTRICAL SYSTEM

Figure 20: FUSELAGE INTERIOR INSTALLATION, A-1C 200

ITEM	PART NUMBER	STOCK NUMBER	DESCRIPTION	QTY	SERIAL EFFECTIVITY
1	35475-005		Panel, Cockpit Interior - extended flap	1	
2	35480-001		Cockpit Interior Panel Assy, LH	1	
3	35477-001		Cockpit Interior Panel Assy, RH	1	
4	35469-501		Throttle Cover Assembly	opt	
	35469-502		Throttle Cover Assembly	1	
5	35492-001		Front Fairing, Outer Window Left	1	
6	35491-001		Front Fairing, Inner Window Left	opt	
	35491-003		Front Fairing, Inner Window Left	1	
7	35496-001		Rear Fairing, Outer Window Left	1	
8		80014	Cushion Assy, Seat Bottom - Front Seat, Thin	1	
10		80015	Cushion Assy, Seat Back - Front Seat, Thin	1	
		80001	Seat Assembly, Front (black fabric)	STD	(incl back and bottom)
		80001-A	Cover, Front Seat Back (for airbag instl)	opt	
9		80016	Cushion Assy, Seat Bottom - Rear Seat, Thin	1	
11		80017	Cushion Assy, Seat Back - Rear Seat, Thin	1	
		80002	Seat Assembly, Rear (black fabric)	STD	(incl back and bottom)
12	35457-001		Panel, Baggage Compartment - Rear	1	
13	35455-001		Panel, Rear Cabin	1	
14	35448-001		Plate, Headliner Trim - left side	1	
	35448-002		Plate, Headliner Trim - right side	1	
15	35522-001		Headliner	1	
	35522-002		Trim Panel, Headliner	1	(not illustrated)
16	35450-001		Angle, Baggage Compartmnet - Rear	1	
17	35452-001		Floor, Baggage Compartment	1	
18		56835	Screw	91	
19		58740	Washer	4	
20		55601	Nut, self-locking	4	
21		62668	Rivet, Blind Open End	14	
22		44402	Screw, PK	32	
23		63327	Stud, 1/4 Turn Fastener	16	
24	35476-001		Panel, Cockpit Interior (aft right side)	1	
25	35493-001		Front Fairing, Inner Window Right	1	
26	35494-001		Front Fairing, Outer Window Right	1	
27	35497-001		Rear Fairing, Inner Window Right	1	
28	35498-001		Rear Fairing, Outer Window Right	1	
29	35459-003		Panel, Baggage Compartment (left side w/notch)	1	std
	35459-004		Panel, Baggage Comp'ment (with access)	OPT	(RH access door instl)
	35459-006		Panel, Baggage Compartment (right side w/notch)	1	std

Figure 20: FUSELAGE INTERIOR INSTALLATION, A-1C 200

ITEM	PART NUMBER	STOCK NUMBER	DESCRIPTION	QTY	SERIAL EFFECTIVITY
30	35478-501		Panel, Cockpit Interior (aft right side)	1	
31	35479-501		Panel, Cockpit Interior (mid right side)	1	
32	35357-001		Floorboard, Front Seat LH	1	
	35357-002		Floorboard, Front Seat RH	1	
33	35282-001		Heel Plate	4	
34	35432-501		Floorboard Joining Plate Assembly	1	
35	35194-001		Panel, Front Seat Bottom	1	
36	35193-001		Panel, Front Seat Back	1	
37	30149-503		Seat Belt Harness Assembly, Front	1	
	30149-504		Seat Belt Harness Assembly, Rear	1	
		34750	AAIR System, Rotary - pilot and co-pilot	OPT	
38	35618-001		Floorboard, Rear Seat LH	1	
	35618-002		Floorboard, Rear Seat LH	1	
39	35192-001		Panel, Rear Seat Bottom	1	
40	35462-001		Channel, Rudder Cable Cover - LH	1	
	35462-002		Channel, Rudder Cable Cover - RH	1	
41	35449-001		Angle, Baggage Compartment Side (left)	1	
	35449-002		Angle, Baggage Compartment Side (right)	1	
42	35191-001		Panel, Rear Seat Back	1	
43	35621-501		Pulley Guard Assy, LH (not illustrated)	1	
44	35621-502		Pulley Guard Assy, RH (not illustrated)	1	
45		59174	Screw, PK	28	
46		56850	Screw	28	
47		56475	Rivet, universal head	122	
48		80020	Snap, Attachment	6	
49		62669	Pivet, Pull-stem	6	
50		62662	Rivet, Pull-stem	40	
51		81701	T-handle Pin w/lanyard	2	
52		50880	Bolt, undrilled shank	1	
53		58760	Washer	1	
54		55400	Nut, self-locking fiber	1	
56	35509-001		Shield, Aft Fuselage	1	
				1	
58	35617-001		Floorboard, Center LH	1	
	35617-002		Floorboard, Center RH	1	

FIGURE 20: FUSELAGE INTERIOR

FIGURE 21: FUSELAGE PANELS WINDOW, A-1C 200

ITEM	PART NUMBER	CODE NUMBER	DESCRIPTION	QTY	SERIAL EFFECTIVITY
1		81075	Window, Baggage Compartment LH	1	
1		81070	Window, Baggage Compartment RH	1	
2	35365-001		Fairing, Side Window - LH	1	
3	35349-001		Panel, Fuselage Side - LH	1	
4	35351-501		Fuselage Belly Panel Assembly, (aft)	1	
5	35354-001		Panel, Fuselage Side	1	opt
	35354-002		Panel, Fuselage Side	1	std
6	35356-501		Fuselage Belly Panel Assembly, (ctr)	1	
7	35364-501		Fuselage Former Assy	3	
8	35359-501		Fuselage Belly Panel Assy, left side	1	
	35359-502		Fuselage Belly Panel Assy, right side	1	
9	35358-501		Fuselage Side Panel Assy, left side	1	
10	35360-501		Fuselage Belly Panel Assy (fwd)	1	
11		60760	Windshield, Clear	1	
12	35605-001		Windshield Attach Angle, outer	1	
13		81505	Windshield Strip, Rear	1	
14	35363-001		Fairing, Windshield Side - LH	1	
	35363-002		Fairing, Windshield Side - RH	1	
15	35531-501		Sliding Window Assembly, Side (front)	1	opt
	35531-503		Sliding Window Assembly, Side (front)	1	std
16	35531-502		Sliding Window Assembly, Side (rear)	1	opt
	35531-504		Sliding Window Assembly, Side (rear)	1	std
17	35373-501		Wing Root Panel Assembly (left side)	1	
18		81065	Window, Side	1	
	35338-002		Window, Side Sliding (full span)	1	
19	35361-001		Fuselage Cowl Panel Assy (left side)	1	
	35361-002		Fuselage Cowl Panel Assy (right side)	1	
20		56835	Screw	206	
21		56861	Screw	47	
22	35368-001		Fairing, Top Windshield	1	
23	35371-001		Fairing, Side Skylight - LH	1	
24	35371-002		Fairing, Side Skylight - RH	1	
25	35092-004		Channel, Sliding Window - top	1	opt
	35392-007		Channel, Sliding Window - top	1	std
26		44402	Screw, PK	8	
27		60765	Skylight, green tint	1	
		60766	Skylight, clear	A/R	
28	35370-501		Skylight Support Assembly	1	

FIGURE 21: FUSELAGE PANELS WINDOW, A-1C 200

29		55550	Nut, self-locking	9	
30		55601	Nut, self-locking	5	
31		56880	Screw	3	
32		58850	Washer, large area	3	
33	35369-001		Fairing, Rear Skylight	1	
34	35372-502		Wing Root Panel Assembly (right side)	1	
35	35362-001		Fairing, Windshield Side - RH	1	
36	35366-001		Fairing, Side Window RH	1	
37	35350-501		Fuselage Side Panel Assembly, RH	1	
38	35355-001		Panel, Fuselage Side - RH	1	
39	35358-502		Fuselage Side Panel Assembly, RH	1	
	35358-504		Fuselage Side Panel Assembly, RH	1	
40		59174	Screw, PK	59	
41	35387-001		Channel, Sliding Window - bottom	1	opt
	35387-004		Channel, Sliding Window - bottom	1	std
41	35387-003		Channel, Sliding Window - top	1	opt
	35387-006		Channel, Sliding Window - top	1	std
42	35387-002		Channel, Sliding Window - front &rear	2	
	35387-002		Channel, Sliding Window - front	1	opt
	35387-005		Channel, Sliding Window - front	1	std
43	35385-001		Fairing, Side Window	1	
44		56635	Screw	50	
45		55475	Nut, self-locking	44	
46		56631	Screw	9	
47		55617	Nut, Anchor	9	
48		62662	Rivet, pull-stem	40	
49	35118-001		Angle, Windshield	1	
50		62671	Rivet, pull-stem	8	
51	35197-001		Cover, door	1	
	35214-501		Lower Door Assy (incl: cover, channels, hinge & latch)		
52	35489-001		Panel, Door Interior	1	
53	35206-501		Door Handle Assembly	1	
54	35211-501		Latch Pin Cover Assembly (front)	1	
	35211-502		Latch Pin Cover Assembly (rear)	1	
55	35212-501		Latch Pin Assembly, front	1	
	35212-502		Latch Pin Assembly, rear	1	
56	35213-001		Tube, Door Latch Link (front)	1	
	35213-002		Tube, Door Latch Link (rear)	1	
57		55750	Cotter Pin	2	
58		56834	Screw	4	
59		63027	Spring, Compression	2	
60		55973	Pin, Clevis	2	
61		58740	Washer	2	

FIGURE 21: FUSELAGE PANELS WINDOW, A-1C 200

62		55675	Cotter Pin	2	
63		59146	Screw, PK	33	
64	35529-001		Hinge, Lower Door	1	
65		56629	Screw	9	
66		58700	Washer	9	
67	35434-001		Angle, Upper Door	1	
68	35435-001		Angle, Upper Door	1	
69	35436-001		Angle, Upper Door	1	
70	35437-001		Fairing, Upper Door	3	
71	35438-001		Fairing, Upper Door	1	
72	35439-001		Fairing, Upper Door	1	
73	35440-001		Fairing, Upper Door	1	
74	35196-501		Window Frame Assembly	1	
75	35352-001		Window, Door	1	
76		56656	Screw	9	
77		55350	Nut, self-locking (thin)	24	
78	35442-001		Hinge, Upper Door	1	
79	1-214-031		Holder, License	1	
	1-214-032		Window, License Holder	1	
		62669	Rivet	4	
80	35579-001		Drip Rail, Access Door	1	
		62668	Rivet, Pull-stem	11	
81	35578-501		Access Door Assy (w/camloc fastener)	1	
		82150	Wing Nut	5	
		62643	Grommet Fastener	5	
82	35653-001		Panel Assy, Baggage Compartment	1	
		59144	Screw, PK	12	
		56627	Screw, Truss Head Phillips	16	
83	35654-001		Door Assy, Baggage Compartment	1	
		56631	Screw, Truss Head Phillips	4	
84	35462-001		Channel, Rudder Cable Cover, LH	1	
	35462-002		Channel, Rudder Cable Cover, RH	1	
		62668	Rivet, pull-stem	30	(20 left/10 right)
		56627	Screw, PK	10	right hand only

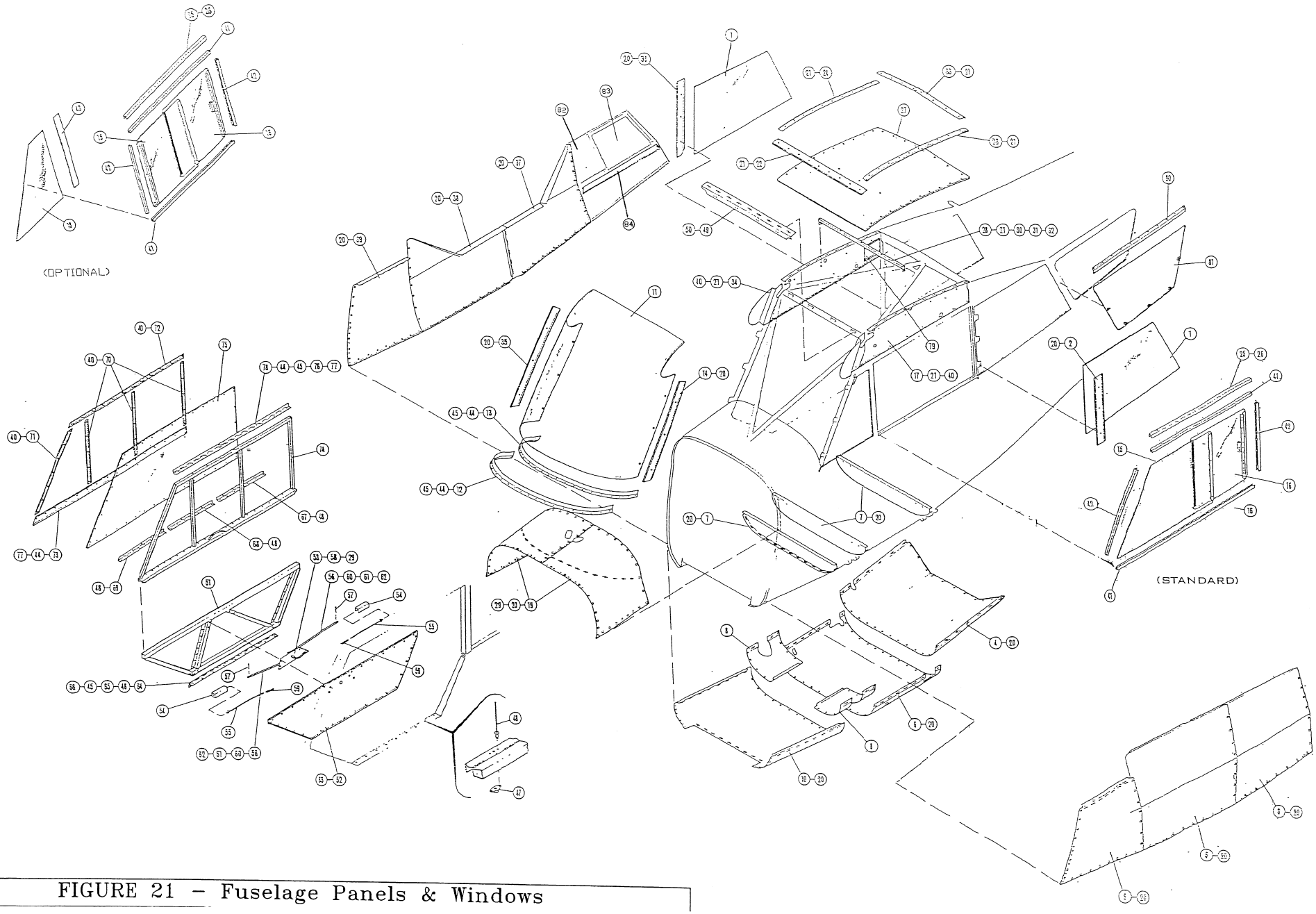

FIGURE 21 – Fuselage Panels & Windows

Figure 22 - Engine Installation, A-1C 200

ITEM	PART NUMBER	STOCK NUMBER	DESCRIPTION	LH	RH	TOTAL QTY	SERIAL EFFECTIVITY
1		61189	Engine, Lycoming			1	
2		81634	Starter, Sky-tec (furnished w/engine)			1	
3	45454-501		Exhaust System			1	
4							
5	1-0609-505		Baffle Assembly, LH - Side Front	1		1	
6	1-0609-507		Baffle Assembly, LH - Side Rear	1		1	
7	1-0609-506		Baffle Assembly, RH - Side Front		1	1	
8	1-0609-508		Baffle Assembly, RH - Side Rear		1	1	
9	45378-501		Baffle Assembly, Rear Center			1	
10	45379-501		Baffle Assembly, Rear L.H.	1		1	
11	45380-501		Baffle Assembly, Rear RH		1	1	
12	45382-501		Baffle Assembly, Front RH		1	1	
13	45381-501		Baffle Assembly, Front LH	1		1	
14		56526	Screw	6	6	12	
15		58650	Washer, locking star	6	6	12	
16	35339-001		Tube, Engine Breather	1		1	
17	35266-003		Tube, Short - Flexible	1		1	
18		60812	Clamp, Aeroseal			2	
19		52927	Bolt, undrilled			4	
20		58800	Washer			4	
21		55510	Nut, self-locking			4	
22	2-7000-002		Bushing			4	
23	35451-002		Support, Rear Baffle			1	
24		62262	Lord Mount			4	
25	35016-502		Engine Mount Assembly			1	
26		52676	Bolt, undrilled			4	
27		58790	Washer			4	
28		55450	Nut, self-locking			4	
29		56835	Screw, fillester Hd			5	
29A		56833	Screw, fillester Hd			8	
30		58720	Washer			13	
31		55550	Nut, self-locking			13	
32	30655-911		Tie Rod Assy w/chafe hose	1	1	2	
33							
34		58700	Washer			8	
35		55475	Nut, self-locking			8	
36	35266-004		Tube, flexible Chafe Hose	1	1	2	
37	45453-501		Box, Engine Intake			1	
38		81631	Air Filter Kit, Complete			1	
		81632	Filter (replacement)			A/R	
39		60828	Clamp			2	
40		34440	Duct, Round			1	
42	45304-001		Brace, Baffle - rear support			1	
43		56850	Screw (wire loom)			4	
		56850	Screw (45304-001 brace)			1	
		56850	Screw (45378 to 45379)			3	
		58740	Washer (wire loom)			4	

Figure 22 - Engine Installation, A-1C 200

ITEM	PART NUMBER	STOCK NUMBER	DESCRIPTION	LH	RH	TOTAL QTY	SERIAL EFFECTIVITY
44		58740	Washer (45304-001 brace)			1	
		58740	Washer (45378 to 34379)			3	
45		55392	Nut (wire loom)			4	
		55392	Nut (45304-002 brace)			1	
		55392	Nut (45378 to 45379)			3	
46		57441	Clamp			1	
47	35393-502		Heater Box Assembly			1	
48	30655-013		Tie Rod, RH Inboard			1	
49	30655-011		Tie Rod, LH Inboard			1	
50	35384-501		Firewall Assembly			1	
51	35402-001		Gusset, Firewall LH			1	
	35402-002		Gusset, Firewall RH			1	
52		62650	Rivet			12	
53		58652	Star Washer (furn w/engine)			8	
54		62330	Nut (furn w/engine)			8	
55		59305	RF516185 Nut, pal (furn w/engine)			8	
56	35428-001		Angle, Engine Baffle			1	
57		56505	Rivet			8	
58	2-7301-19		Angle, Engine Baffle			1	
59		56834	Screw			4	
60		81590	Gasket			1	
63		81795	Carb Gasket			1	
65		61214	Alternator, (furn w/engine)			1	
66		61193	Bolt, Engine			1	
67	45454-508		Riser Assembly, Left Front			1	
68	45454-507		Riser Assembly, Right Front			1	
69	45454-506		Riser Assembly, Left Rear			1	
70	45454-505		Riser Assembly, Right Rear			1	
71	45454-503		Muffler Shroud Assembly			1	
72			Muffler			2	
73	45295-001		Closure, Baffle - LH			1	
74	45295-002		Closure, Baffle - RH			1	
75	45382-502		Angle, RH Baffle			1	
76							
77	45297-003		Reinforcement, Baffle			1	
78	45393-501		Heat Collector Assy, Alternate Air			1	
79			Clamp			2	
79		34448	Hose, Blast Tube			1	
79		60828	Hose Clamp			2	
80	45392-501		Oil Cooler Duct Intake			1	
81		34440	Hose, Cabin Heat			1	
		60828	Hose Clamp			2	
82		34449	Hose, Heat Collector			1	
		60828	Hose Clamp			2	
83	45395-511		Alternator Blast Tube Assembly			1	
85		60804	Clamp, worm gear			1	
86		34444	Hose, Duct			1	
87		57443	Clamp, cushioned			1	

Figure 22 - Engine Installation, A-1C 200

ITEM	PART NUMBER	STOCK NUMBER	DESCRIPTION	LH	RH	TOTAL QTY	SERIAL EFFECTIVITY
88		57411	Clamp, cushioned			1	
89		56861	Screw			1	
90	35624-034		Flange, defroster			1	Part of Baffle 45380-501
91		62668	Rivet, pull-stem			4	Part of Baffle 45380-501

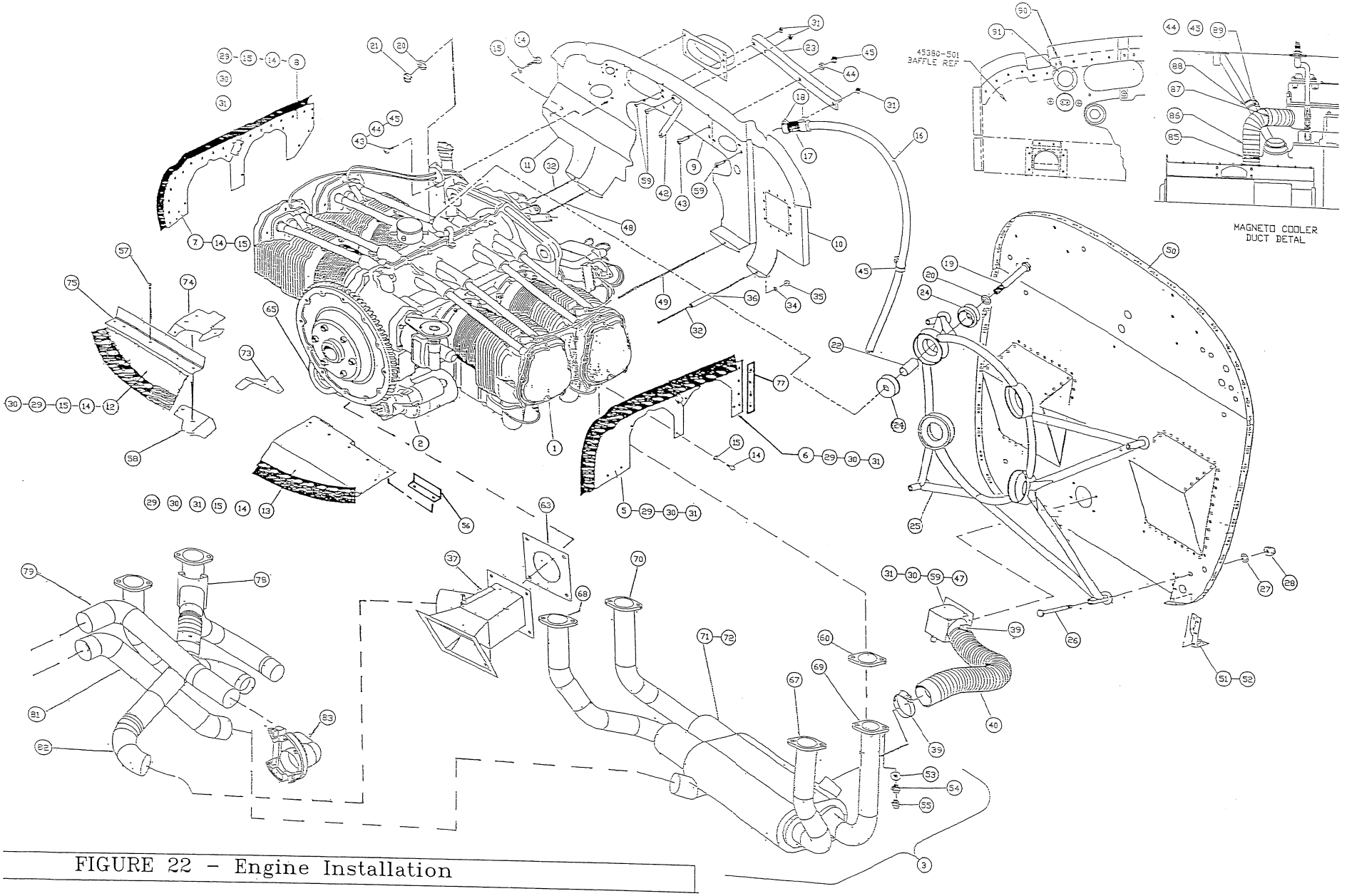

FIGURE 22 - Engine Installation

Figure 23 - Engine Equipment Installation, A-1C 200

ITEM	PART NUMBER	CODE NUMBER	DESCRIPTION	Prop Gov & Throttle Handle	Oil Cooler Instl	Mix Cont'l LH View	Alt.Air & Throttle Cont'l RH View	Total Req't
1		79921	Clamp, Governor Cable					1
2		59298	Set Screw, SST (self-locking)					1
3		58740	Washer	13	8	1	21	43
4		54375	Castle Nut	2			3	5
5		55675	Cotter Pin	3			3	6
6		50151	Bolt, undrilled				4	4
7		50251	Bolt, undrilled	1				1
8		55392	Nut, self-locking	1	8	2	1	12
9		60537	Cable, Mixture Control			1		1
10		60535	Cable, Alternate Air Control				1	1
11		60526	Cable, Throttle Control	1				1
12		60648	Cable, Prop. Gov. Control	1				1
13		58450	Grommet	3				3
14		58465	Grommet	3				3
15	2-9000-011		Bracket, Prop. Governor	1				1
16		56850	Screw, fillister head		6			6
17		57395	Clamp, cushioned	2			1	3
18		58850	Washer, large area			3		3
19		50994	Bolt, drilled head			1		1
20		56940	Terminal, tie rod	1				1
21	35632-001		Support Plate, Oil Cooler		1			1
22	35631-001		Support Assembly, Oil Cooler		1			1
23		50026	Bolt, undrilled		8		1	9
24		57800	Elbow, 90 degree		1			1
25	35389-001		Bracket, Oil Cooler Reinforcement		2			2
26		57640	Nipple		1			1
27		60852	Clamp			1		1
28	45395-030		Control Rod, Throttle	1				1
29		40106	Hose Assembly (radiator to radiator)		1			1
30		81768	Hose Assembly (right radiator to engine port)		1			1
31	45391-501		Oil Cooler Duct Assembly		1			1
32		57960	Elbow, 45 degree		4			4
33		61074	Radiator		1			
34		60846	Clamp, worm gear		2			2
35		34443	Hose, Duct		1			1
36	45391-501		Oil Cooler Duct Intake Assembly		1			1
37		50301	Bolt, undrilled					1
38		50997	Bolt, undrilled					1
39		58760	Washer					3
40		54700	Nut, jam				2	2
41		50900	Bolt, drilled shank				1	1
42		54400	Nut, castle			1		1
43	2-7504-001		Bracket, Mixture Control			1		1
44		50101	Bolt, undrilled			4		4

Figure 23 - Engine Equipment Installation, A-1C 200

45	45395-010		Bracket, Throttle Cable Attach				1	1
46		60090	Bearing, Rod End				3	3
47		54548	Jam Nut				3	3
48	35486-501		Throttle Assembly	2				2
49	30146-013		Washer, friction	2				2
50	35487-501		Rod, Throttle Connecting	1				1
51		50320	Bolt, drilled shank	1				1
52		58750	Washer	A/R				A/R
53		55975	Pin, Clevis	2				2
54		55979	Pin, Clevis	1				1
55		80066	Switch, Push to Talk Button	2				2
56	35343-004		Clamp, Control Cable				1	1
57	35343-002		Clamp, Control Cable				1	1
58		50003	Bolt, undrilled				2	2
59		58770	Washer, thin			2		2
60	2-9000-017		Bushing, Mixture Control			1		1
61	45299-501		Baffle Assembly, Left Rear (w/dblr)		1			1
62		61071	Radiator, (Niagra)					
63		40112	Hose Assembly (left radiator to engine port)		1			1
64	45395-006		Tube Assembly, pivot				1	1
65	45395-011		Bracket, Pivot Tube				4	4
66	45395-012		Bracket, Support				1	1
67	45395-013		Angle, Alternate Air LH				1	1
68	45395-014		Angle, Alternate Air RH				1	1
69		61193	Screw, drilled head				4	4
70		58650	Star Washer				4	4
71	45395-019		Arm, Actuator				1	1
72	45395-020		Support, Alternate Air				1	1
73	45453-501		Intake Box Assembly (ref. only)				1	1
74		56834	Screw		3			3
75		56835	Screw		6			6
76		56799	Screw		1			1
77		55550	Nut, self-locking	10				10
78		58720	Washer	10				10

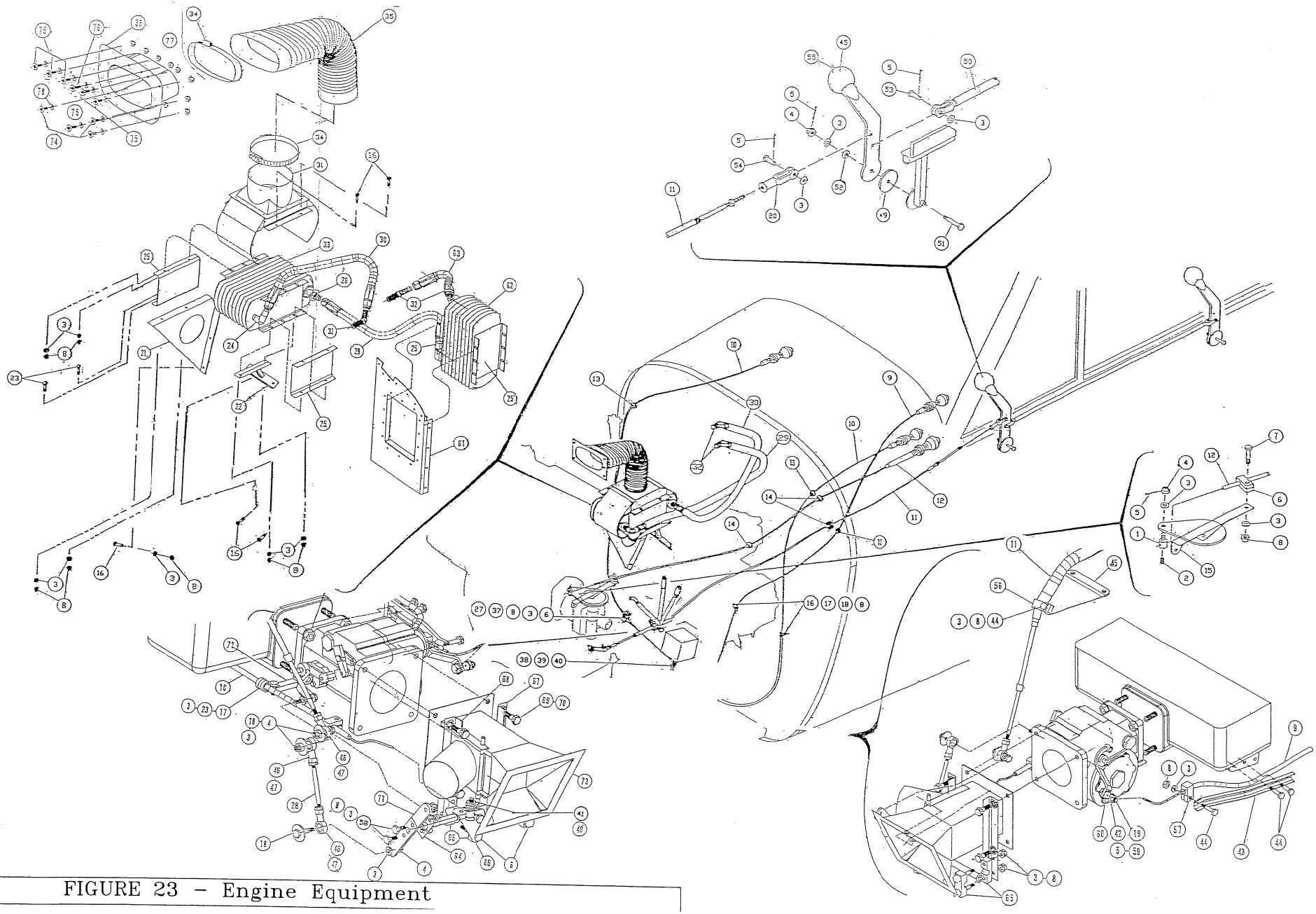

FIGURE 23 – Engine Equipment

Figure 24 Cowling Propeller, A-1C 200

ITEM	PART NUMBER	CODE NUMBER	DESCRIPTION	LH	RH	TOTAL QTY	SERIAL EFFECTIVITY
1		62541	Prop/Spinner Assy # MTV-15-B\205-58			1 set	
		62536	Prop - Hartzell HC-C2YR-1B/F8477-4			OPT	(80 inch mod)
2		61553	Governor: Hartzell V3-6			opt	
		61571	Governor: Hartzell S-1-16			1	
3		62985	Spinner Assembly, MT # P-277			spare	
			Spinner Assembly, Hartzell # C3568-P			OPT	
4	35314-502		Nose Bowl Assembly			1	
	35314-001		Nose Bowl (half) - Upper			1	
	45314-002		Nose Bowl (half) - Lower			1	
	45397-501		Lower Cowl Assembly			1	
5	45397-001		Panel, Lower Cowl			1	
6	45399-501		Cowl Door Assembly, LH	1		1	
	45399-502		Cowl Door Assembly, RH		1	1	
7	35400-501		Channel Assembly, Cowl	1	1	2	
8	35398-001		Panel, Upper Cowl			1	
9		56850	Screw	sides 16	rear 13	29	
9		56855	Screw	front		7	
9		60870	No.10 Nylon Washer	16	20	36	
10		56570	Screw, flush head			4	
11	35429-001		Splice Plate, Nosebowl	1	1	2	
12		56855	AN526-1032R9	4	4	8	
13		58740	Washer	4	4	8	
14		55601	Nut, self-locking	4	4	8	
15	35406-001		Channel, Cowling Side LH	1		1	
15	35406-002		Channel, Cowling Side RH		1	1	
16		56086	Rivet			62	
17		62611	Recepticle, Fastener - Camloc	4	4	8	
18		62261	Louver, Cooling LH	1		1	
18		62262	Louver, Cooling RH		1	1	
19	45397-013		Pivot Support, LH	1		1	
20	45397-014		Pivot Support, RH		1	1	
		56511	Rivet	6	6	12	
21	45397-016		Fairing	1		1	
		56085	Rivet	14		14	
		56086	Rivet	7		7	

Figure 24 Cowling Propeller, A-1C 200

22	45397-015		Blister	1		1	
		56085	Rivet	9		9	
		56086	Rivet	7		7	
23	45397-017		Arm, Cowl Support LH	1		1	
24	45397-018		Arm, Cowl Support RH		1	1	
		56511	Rivet	3	3	6	
25	45473-001		Stiffener, Lower Cowl Support			1	
		56505	Rivet			7	
26	45397-021		Support Angle Stiffener, LH	1		1	
27	45397-022		Support Angle Stiffener, RH		1	1	
		56511	Rivet	5	5	10	
28		81971	Placard, A-1B (black)	1	1	2	
		81972	Placard, A-1B (white)	1	1	2	
			Placard, A-1B (custom colors available)				
		81976	Placard, Aviat Aircraft Husky (white)	1	1	2	
		81977	Placard, Aviat Aircraft Husky (black)	1	1	2	
			Placard, Aviat Aircraft Husky (custom colors available)				
29		62643	Grommet, Fastener; Camloc 4002-H	4	4	8	
30		82150	Nut, Camloc Wing; Camloc 4002-4-W	4	4	8	
31	45397-019		Support Angle, Cowl Flat LH	1		1	
32	45397-020		Support Angle, Cowl Flat RH		1	1	
		56505	Rivet	7	7	14	
33	45396-501		Cowl Flap Assembly			1	
		50875	drilled shank (at flap hinge)	1	1	2	
		54400	Nut, castle (at flap hinge)	1	1	2	
		58760	Washer (at flap hinge)	2	2	4	
	30146-015	31230	Washer, fiber (at flap hinge)	1	1	2	
		55979	Pin, flat head (at control cable)			1	
		56075	Pin, safety (at control cable)			1	
		56940	Clevis (at control cable)			1	
		54548	Jam Nut (furn w/ control cable)			1	
42	35624-012		Cover		x	2	
43	35624-011		Screen		x	2	
44	35626-002		Flange		x	2	
45		56631	Screw		x	8	
46		60866	No. 6 Nylon Washer	6	8	14	
47		58710	Washer	6	8	14	
48		55475	Nut	6	8	14	
49	45314-013		Cover		1	1	
50	45314-014		Screen		1	1	
51	45314-011		Bracket, LH Support		1	1	
52	45314-012		Bracket, RH Support		1	1	
53		56635	Screw		6	6	

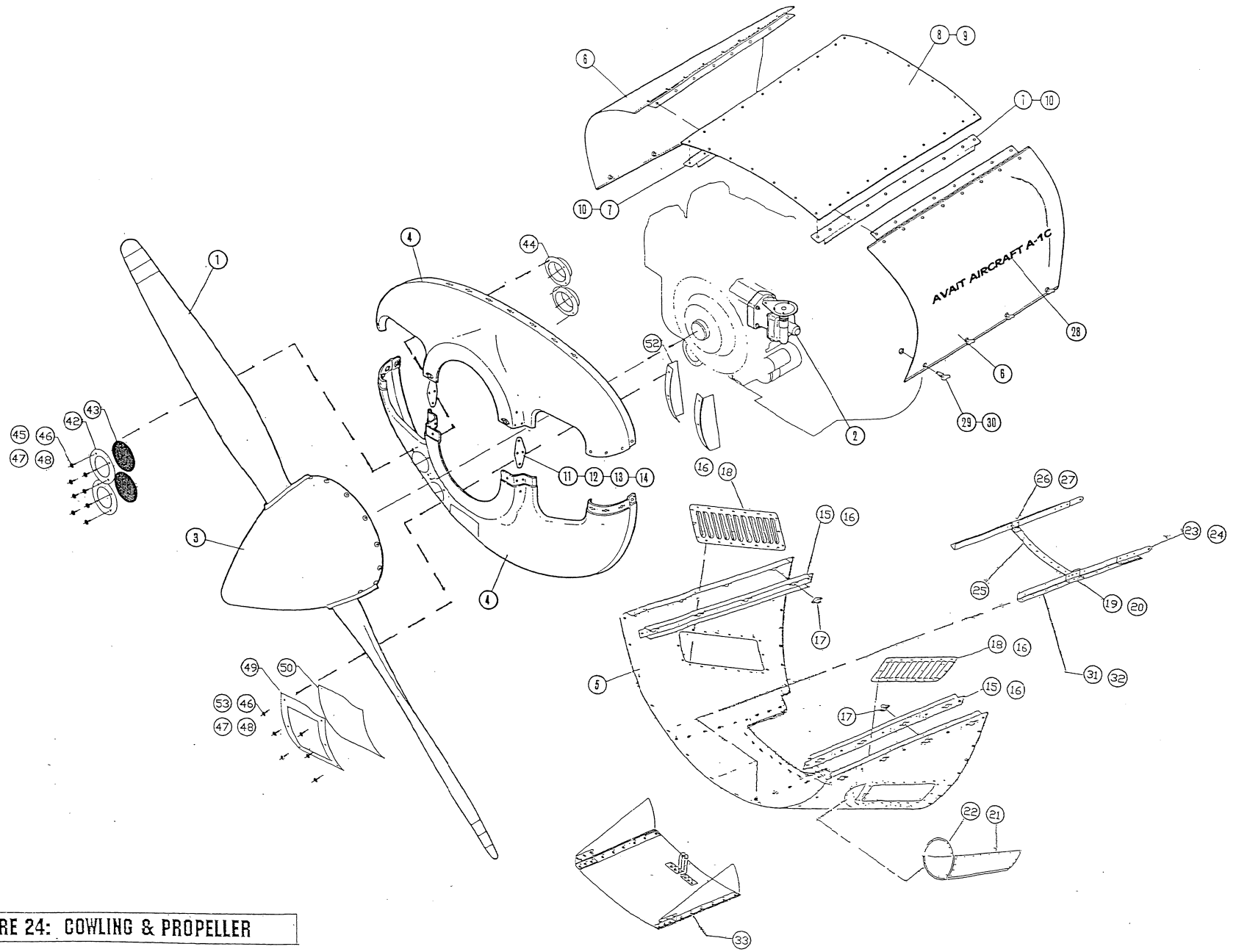

FIGURE 24: COWLING & PROPELLER

Fig 25 Placards and Markings, A-1C 200, standard

ITEM	PART NO.	CODE NO.	DESCRIPTION	STD 35218 Panel	Placards NOT on Instrument Panel
1		81954	Placard, Electrical Switches (optional)	1	
2		81902	Placard, Circuit Breakers 11 hole - (above circuit Breakers)	1	
3		81903	Placard, Solo Front Seat Only (lower instrument panel)	1	
4		81905	Placard - Alternator -trip field/low output (above airspeed over red and amber lights)	1	
5	45403-114		Placard: Boost Pump - on/off (over boost pump switch)	1	
6		81908	Placard, Trim Indicator - nose up/neut/nose down (above trim indicator)		1
7		81907	Placard, Crosswind - Demonstrated Crosswind 15 MPH - (above airspeed Indicator)	1	
8		81910	Placard: On - 50 gals usable - (below fuel selector at ON position) (COLOR RED)		1
9		81958	Placard: Design maneuvering Speed 113 MPH IAS - (below airspeed indicator)	1	
10		81909	Placard, Main Fuel Selector - (above fuel selector in OFF position)		1
11		81911	Placard: Maximum Baggage 50 LBS - (rear of baggage compartment)	1	
12		81912	Placard: Fuel 100/100LL 25 Gals Usable - (forward of each fuel cap)		2
13		81913	Placard, Operation Limitations - (below fwd throttle on interior panel)	1	
14		81914	Placard, OPEN for Alternate Air - (below static air valve)	1	
15		81915	Placard, Flap Handle - (on flap handle)		
16		82090	Placard: Cabin Heat Pull On / Cabin Air Pull On - (below Cabin Heat and Cabin Air control)	1	
17		81916	Placard, NO SMOKING - (lower right instrument panel)	1	
18		81918	Placard, MIXTURE Pull for Lean - (above mixture control)	1	
19		81919	Placard, PROPELLER Push for High RPM - (above propeller control)	1	
20		81923	Placard, close THROTTLE open - (below both throttle handles)		2
21		81924	Placard: Elevator Trim, nose up/nose down - (above trim wheel)		1
22		81925	Placard, PARKING BRAKE - (tube forward of brake pedals)		2
23		81926	Placard, DOOR LATCH lift to open - (below door latch)		1
24		81955	Placard, Map Light - (over map light switch)	1	
25	45403-115		Placard: Alternate Air, Pull-On	1	
26		81929	Placard, Instrument Light Dimmer - (below dimmer knob at right wing root panel)	1	
27		81933	Placard, NO STEP - (one on each right hand wing strut)		2
28		81932	Placard: 25 gals usable - (next to each sight gauge)		2
29		81934	Placard, headphone - (below rear mike and phone plug)	1	
30		81947	Plate, Serial Number: Aviat Aircraft Inc - (exterior right side cockpit panel)		1
31		81935	Placard, Fuel Sight Gauge - (left wing root)		1
32		81936	Placard, Fuel Sight Gauge - (right wing root)		1

Fig 25 Placards and Markings, A-1C 200, standard

ITEM	PART NO.	CODE NO.	DESCRIPTION	STD 35218 Panel	Placards NOT on Instrument Panel
33		81977	Placard: Aviat Aircraft Inc (Dakota Black) - on wing tips and engine Cowl Doors		4
		81978	Placard: Aviat Aircraft Inc (Insignia White)		opt
			Placard: Aviat Aircraft Inc (custom colors available)		opt
34		81971	Placard: A-1C (Dakota Black) - on wing tip and engine cowl doors		4
		81972	Placard: A-1C (Insignia White)		opt
			Placard: A-1C (custom colors available)		opt
35		82086	Placard: Main Circuit Breaker 19 holes - (over circuit breakers)	1	
36		81974	Decal: U.S. Flag		2
37	35512-038		Placard: Airspeed Static System Water Trap (on firewall under trap)	1	
38	35512-039		Placard: Airspeed Pitot System Water Trap (on firewall, under trap)	1	
39	45403-119		Placard: Maximum Power Fuel Flow	1	
40	45403-117		Placard: Cowl Flap - open/closed		1
41	45403-118		Placard: Boost Pump	1	

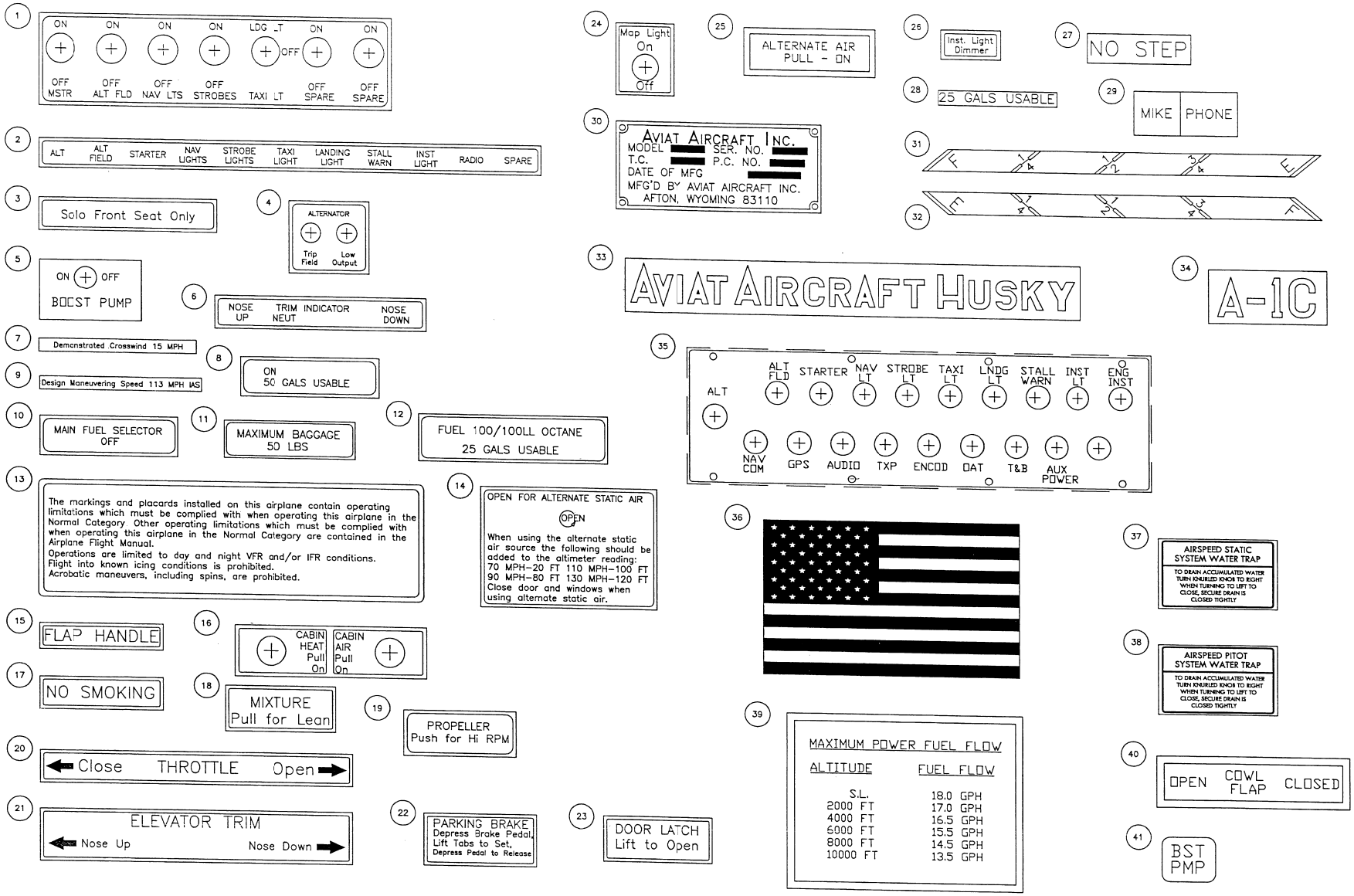

FIGURE 25 – Placards and Markings (Standard)

Figure 25 (A): Placards and Markings, A-1C 200 optional

ITEM	PART NO.	CODE NO.	DESCRIPTION	VM-1000, Garmin 430/530	PLACARD NOT ON INST'MT PANEL
1	35512-098		Placard: Circuit Breaker & Switch used with Bose System w/bst pmp	1	
2		81945	Placard, Circuit Breakers 11 hole - (above circuit Breakers.)	1	
3	35512-071		Placard: Circuit Breakers (over -51 when used with Garmin Pkg	1	
4	35512-068		Placard: Gain Off/On - Music In	opt	
5	35512-113		Placard, Heated Pitot - off tripped/on - (above 35512-051 centered over strobe hole)	1	
6	35512-065		Placard: Aux Power - 12V / 2 amp (below aux breaker)		
7		81956	Placard: Post Lights (wing root panel)	1	
8		81905	Placard - Alternator -trip field/low output (above airspeed over red and amber lights)	1	
9		34947	Placard - Husky Logo (7 in)	opt	
		34946	Placard - Husky Logo (14 in)	opt	
		34945	Placard - Husky Logo (24 in)	1	
		34951	Placard - Husky Logo (7 in w/cutouts)	opt	
		34949	Placard - Husky Logo (14 in w/cutouts)	opt	
		34948	Placard - Husky Logo (24 in w/cutouts)	1	
10		81892	Placard - T & B (on instrument panel under circuit breaker as required	1	
11	35512-095		Placard: GPS, current data card required for IFR flight - (above GPS)	1	
12	35512-067		Placard: Aux Power - 12V / 2 amp (above aux breaker)	1	
13	35512-102		Placard: Hobbs Hour Meter	1	
14	35512-063		Placard: Stereo	opt	
15	35512-064		Placard: Mono	opt	
16	35512-083		Placard: Bose	1	
17	35512-043		Placard: Avionics Master Switch		
18	35512-072		Placard - Engine Instrument/oat/spare (over -50 Garmin)		
19	35512-110		Placard - Tripped Off Pitot Heat	opt	
20		81896	Placard, Music In - (below music in plug, left of VM-1000)	OPT	
21	35512-084		Placard - Bose	opt	
22	35655-040		Placard: Secure Stowage Floor Fasteners Before Flight		1
23	35655-066		Placard: Maximum Compartment Weight 30 LBS		1
24		81939	Placard: 1,2,3,4,	opt	
25		82087	Placard: Oil Pressure	1	
26		82092	Placard: Carb Heat - Pull for Hot	1	
27		82091	Placard: Pull for Cabin Air	1	

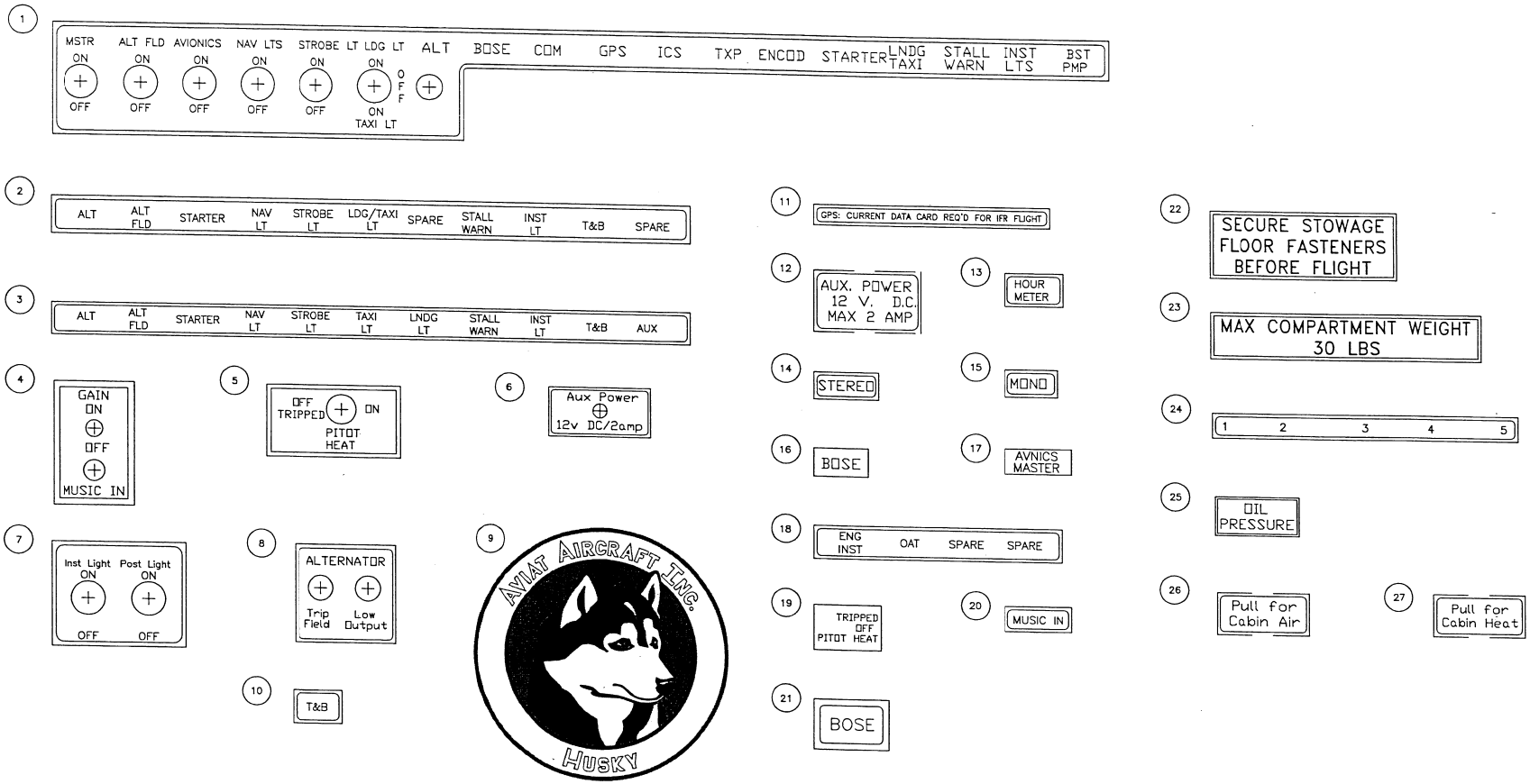

FIGURE 25 (A) – Placards and Markings (Optional)

FIGURE 29: Cowl Flap Installation, A-1C 200

ITEM	PART NUMBER	STOCK NUMBER	DESCRIPTION	TOTAL QTY	SERIAL EFFECTIVITY
1	2-9301-001		Control Handle, Flap	1	
2		60529	Cable Assembly, Flap	1	
3	35395-021		Tube, Cowl Flap	2	
4		79400	Clamp, control cable	1	
5	45395-510		Bracket Assembly, Cable Support	1	
6	45395-501		Cowl Flap Assembly	1	
7		60852	Clamp, semi-structural	4	
8		50051	Bolt, undrilled shank	2	
9		50101	Bolt, undrilled shank	1	
10		50151	Bolt, undrilled shank	2	
11		50176	Bolt, undrilled shank	4	
12		50875	Bolt, drilled shank	2	
13		54400	Castle Nut	2	
14		54548	Jam Nut	2	
15		55392	Nut, self-locking	9	
16		55675	Cotter Pin	1	
17		55979	Pin, Flat Head	2	
18		56075	Pin, Retaining Safety	1	
19		31230	Washer, Fiber	2	
20		56940	Terminal, Tie Rod	2	
21		58740	Washer	18	
22		58750	Washer, thin	1	
23		58760	Washer	4	
24		58465	Grommet	1	

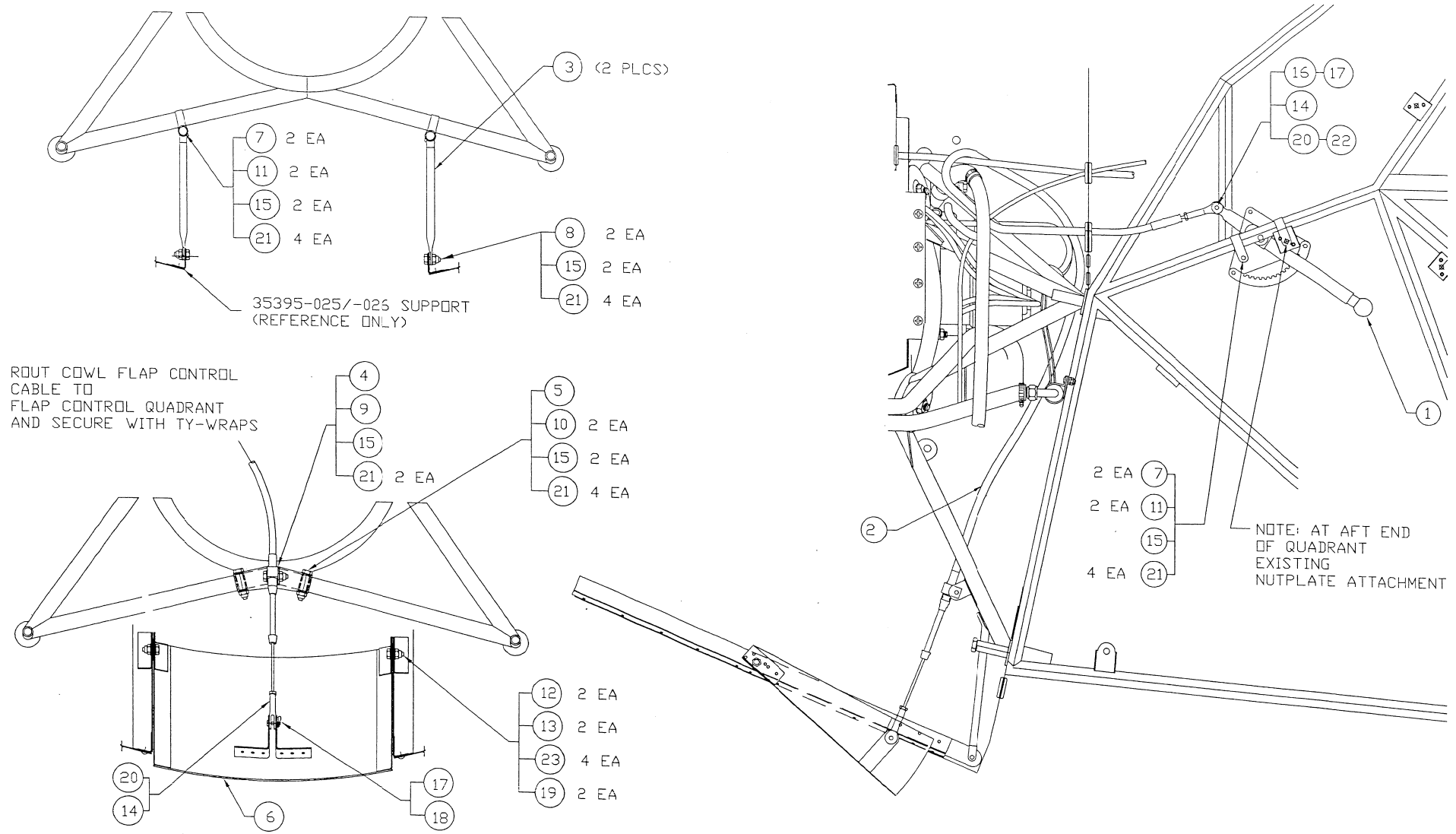

FIGURE 29: COWL FLAP CONTROL

A-1C 200 Electrical Schematic

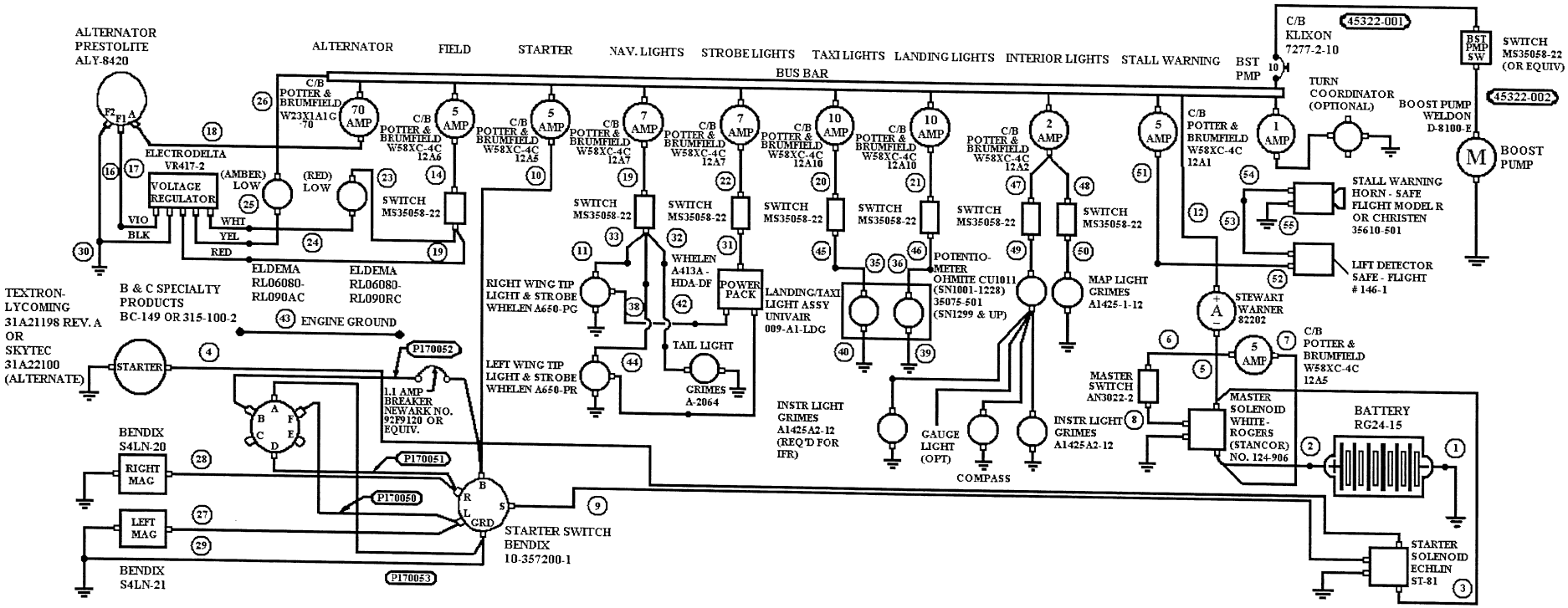

FIGURE 30 - Electrical Schematic

FIGURE 30 (A) – Garmin 430 Radio Schematic

Garmin 430 Radio Schematic

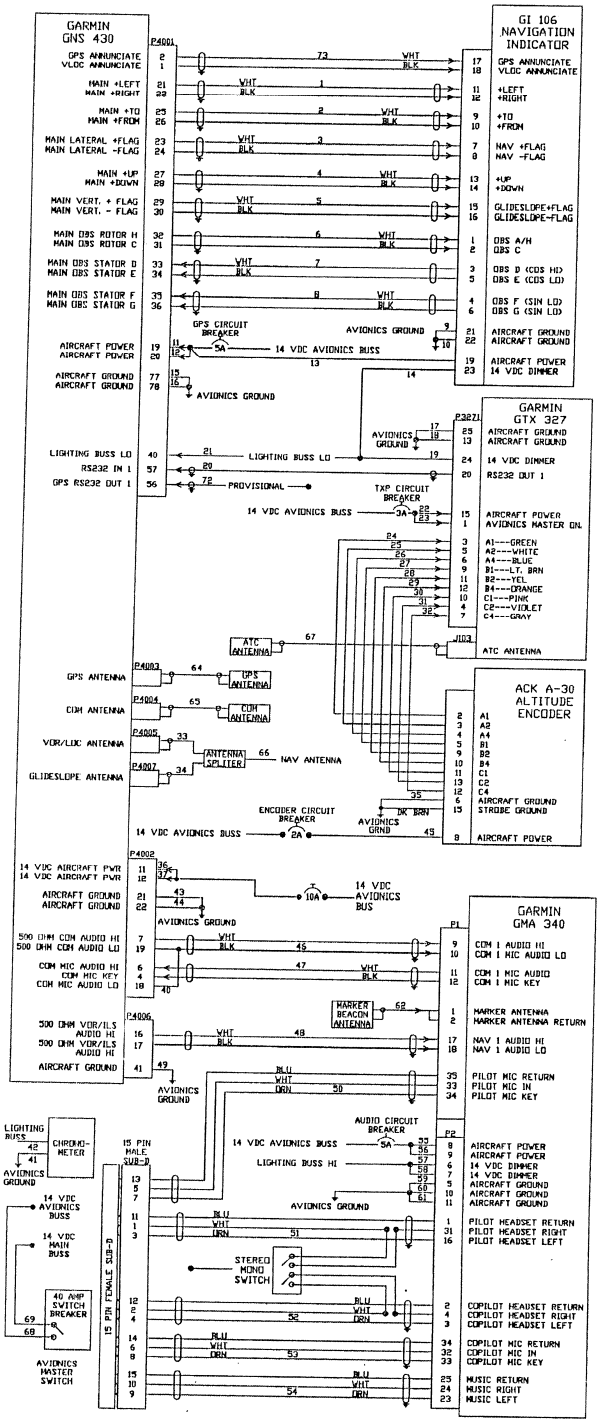

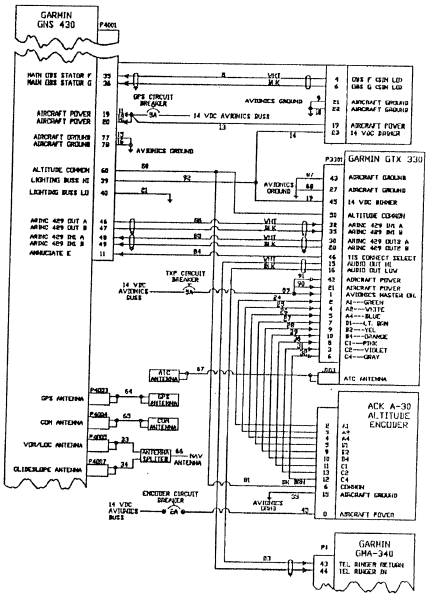

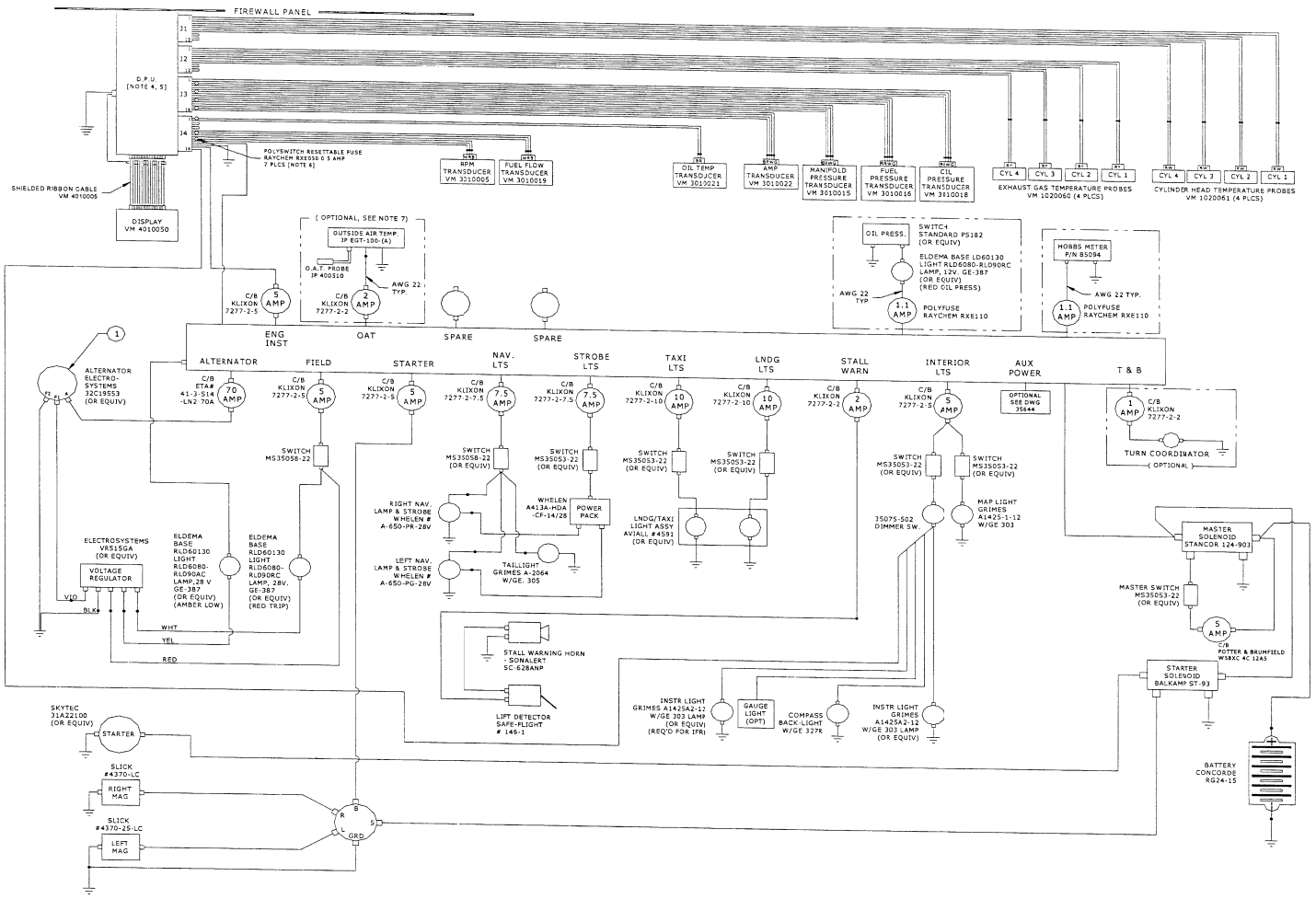

FIGURE 30 (B) – VM 1000 Wiring Schematic

FIGURE 30 (C) – Garmin 530 Radio Schematic

Garmin 530 Radio Schematic

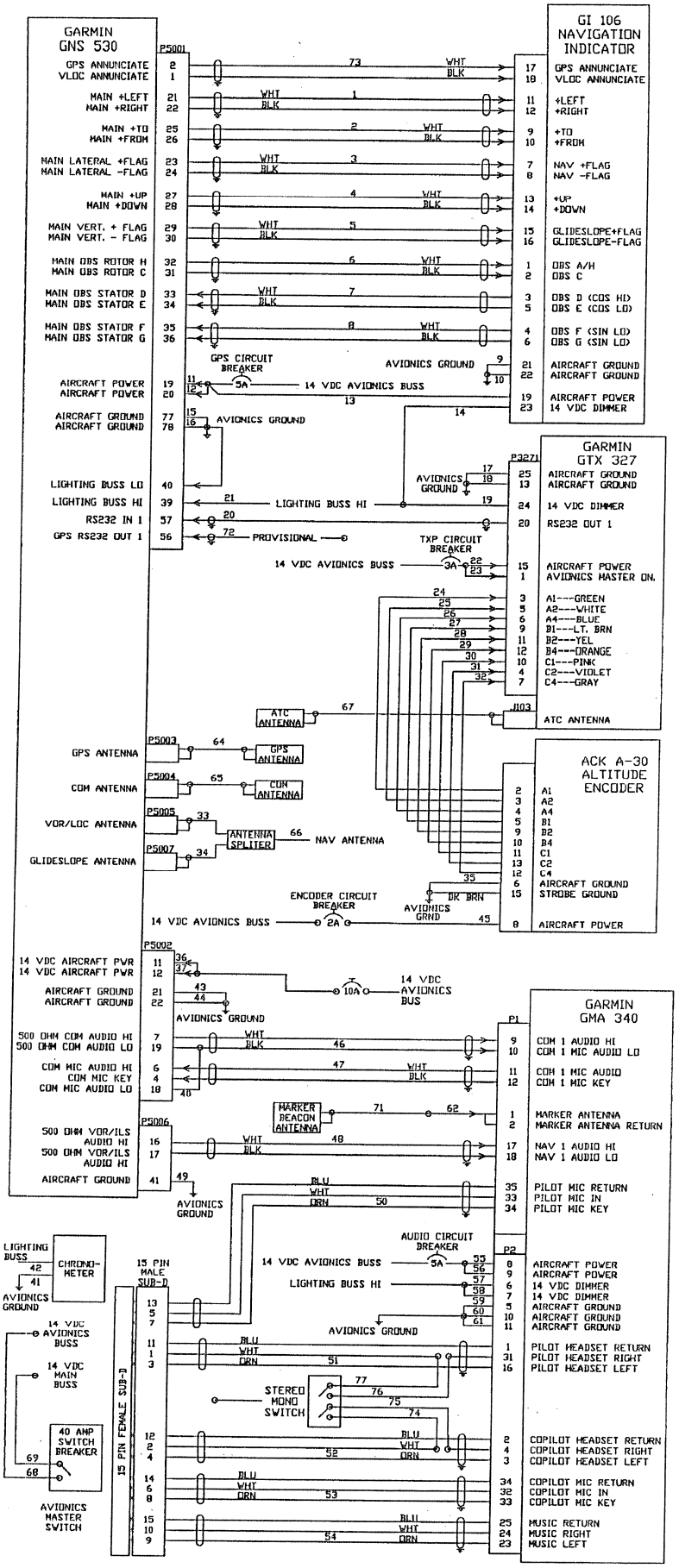

FIGURE 31: Cockpit Winterization Installation, A-1C 200

ITEM	PART NUMBER	CODE NUMBER	DESCRIPTION	LH	RH	TOTAL QT	SERIAL EFFECTIVITY
1	35357-001		Floorboard, Front Seat LH	1		1	
2	35357-002		Floorboard, Front Seat RH		1	1	
3	35620-001		Fairing, Forward Floorboard LH	1		1	
4	35620-002		Fairing, Forward Floorboard RH		1	1	
5	35620-003		Fairing, Rear Floorboard LH	1		1	
6	35620-004		Fairing, Rear Floorboard RH		1	I	
7	35620-005		Fairing, Middle Rear			1	
		59174	Screw, PK			10	
8	35282-001		Heel Plate	2	2	4	
		59174	Screw, PK			56	
9	35617-001		Floorboard, Center LH	1		1	
10	35617-002		Floorboard, Center RH		1	1	
11	35618-001		Floorboard, Rear LH	1		1	
12	35618-002		Floorboard, Rear RH		1	1	
13	35619-001		Angle, Splice	1	1	2	
		56855	Screw, Recessed Truss - Phillips Head	2	2	4	
14	35619-002		Angle, Support - Side	1	1	2	
		56861	Screw, Recessed Truss - Phillips Head	3	3	6	
		59544	Anchor Nut	3	3	6	
15	35619-003		Angle, Support - Front			1	
		56861	Screw, Recessed Truss - Phillips Head			4	
		59544	Anchor Nut			4	
		62669	Rivet, MD424-85			7	
17	35621-501		Pulley Guard Assembly, LH	1		1	
18	35621-502		Pulley Guard Assembly, RH		1	1	
		56861	Screw, Recessed Truss - Phillips Head	1	1	2	
20	35622-501		Bungee Cover Assembly			1	
		59174	Screw, PK			8	
		58540	Grommet			2	
21		33837	Boot, Front Control Stick			1	
22		33838	Boot, Rear Control Stick			1	
		80021	Snap, Attachment w/screw Thread			12	

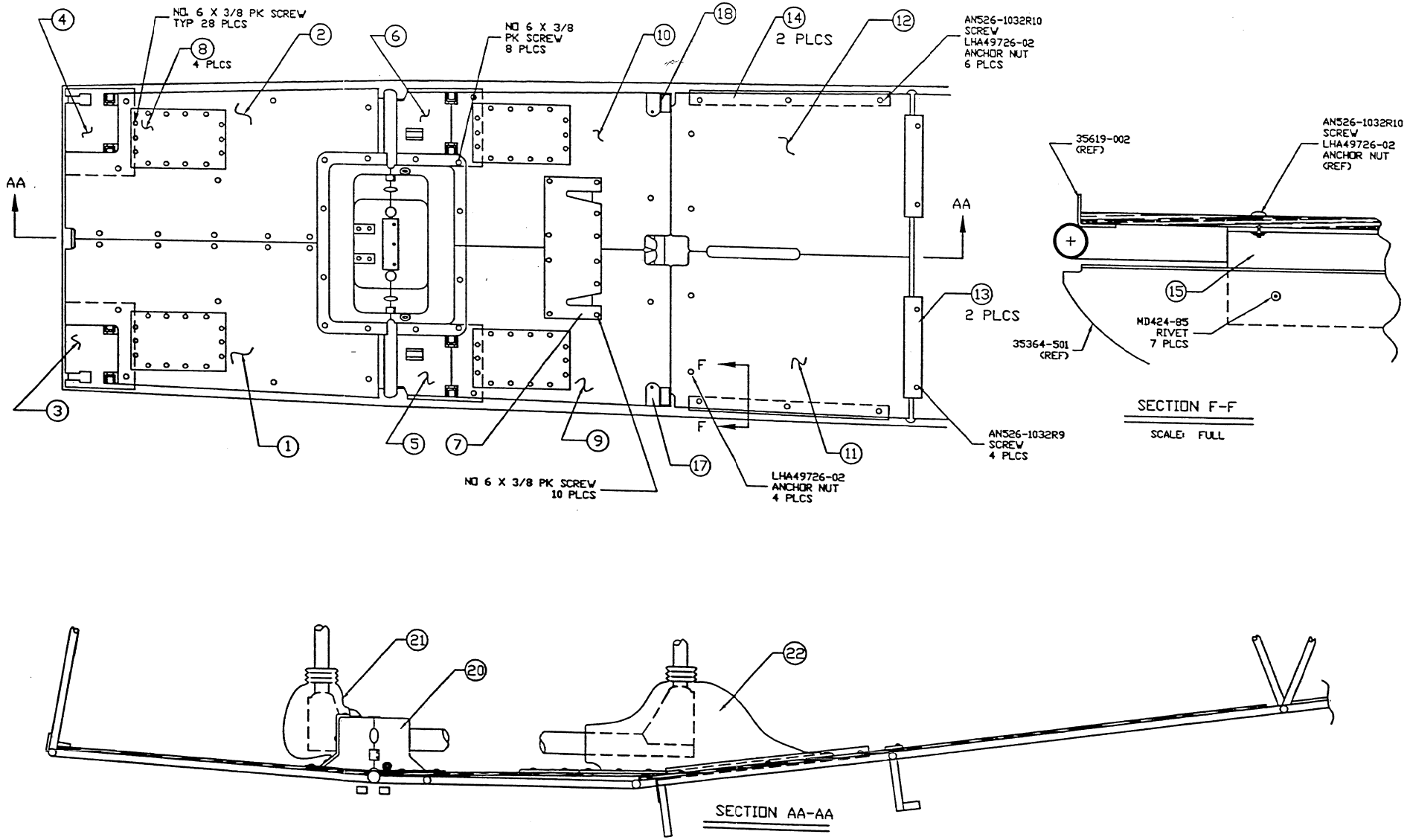

FIGURE 31 – Fuselage Winterization Installation

FIGURE 32: Aft Stowage Compartment Installation, A-1C 200

ITEM	PART NUMBER	CODE NUMBER	DESCRIPTION	Aft Stowage with RH Access
1	35655-501		Aft Stowage Compartment Installation	
	35656-501		RH Aft Stowage Compartment	
2	35655-002		Battery Access Panel Assembly	1
3	35655-003		Panel Assembly, Bottom Aft	1
4	35655-004		Panel, Rear	1
5	35655-005		Bracket, Tie Down - Universal Assembly	6
6	35655-006		Panel, Side - RH Fwd (w/o RH access)	(optional)
7	35655-007		Panel, Side - LH Aft	1
	35655-008		Panel, Side - RH Aft	1
	35656-058		Panel, Side - RH Aft (use w/RH access panel)	
9	35655-009		Panel, Bottom Aft	1
10	35655-010		Bracket, Tie Down Assembly	(LH only)
11	35655-011		Panel, Front - Aux.	goes into -2
12	35655-012		Door, Access Panel	goes into -2
13	35655-013		Angle, Support LH	goes into -2
14	35655-014		Angle, Support RH	goes into -2
15	35655-015		Hinge, Door	goes into -2
16	35655-016		Reinforcement Angle - Fwd	1
17	35655-017		Reinforcement Angle - Aft	1
18	35655-018		Channel, Aft Trim - LH only	standard
	35656-060		Channel, Aft Trim - LH	optional
	35656-062		Channel, Aft Trim - RH (used w/RH access panel	optional
19	35655-019		Angle, Bottom Trim	1
20	35655-020		Support Panel, Forward Trim	1
21	35655-021		Bracket, Panel Support	1
22	35655-022		Fitting, Clamp Retaining	2
23	35655-023		Shim, Alignment	1 to 3
24	35655-024		Fitting, Clamp Retaining	4
25	35655-025		Support Channel	1
26	35655-026		Bracket, Tie Down Aft	1
27	35655-027		Bracket, Tie Down - Universal	goes into -5
28	35655-028		Panel, Support Angle	1
29	35655-029		Ring, Tie Down	goes into -5/-10
30	35655-030		Support Angle, Right Rear	1
31	35655-031		Support Angle, Left Rear	1
32	35655-032		Support Angle	1
33	35655-033		Support Angle	1
34	35655-034		Support Angle, Forward	1
35	35655-035		Support Angle, Right Aft	1
36	35655-036		Support Angle, Left Aft	1
37	35655-037		Bracket, Tie Down	(LH only)
38	35655-038		Spacer, Rectangular	1

FIGURE 32: Aft Stowage Compartment Installation, A-1C 200

ITEM	PART NUMBER	CODE NUMBER	DESCRIPTION	Aft Stowage with RH Access
39				
40	35655-040	not shown	Decal, Stowage Compartment Spec	1
41	35655-041		Support Angle, Tie Down	1
42	35655-042		Support Angle, Bottom Trim	1
	35655-066	not shown	Decal, Stowage Comp. Max Limits	1
	35655-050	not shown	Angle, Bottom Trim R.H.	1
43	35656-056		Support Angle, Side Trim	1
45	35577-501		Frame, Access Door LH	1
46	35577-502		Frame, Access Door RH	1
49		50176	Bolt, undrilled shank	1
50		55475	Nut, self-locking, fiber	27
51		55550	Nut, self-locking, fiber	4
52		55392	Nut, self-locking, metal	5
53		59545	Nut, Clip	4
54		59542	Nut, Anchor	33
56		59146	Screw, self-tapping	10
57		56546	Screw, Rec Hd PH	8
58		56560	Screw, Rec. Hd PH	4
59		56626	Screw, Truss Hd PH	49
60		56629	Screw, Truss Hd Ph	20
61		56631	Screw, Truss Hd PH	4
62		56635	Screw, Truss Hd PH	2
65		56834	Screw, Truss Hd PH	4
70		56861	Screw, Truss Hd PH	8
71		58700	Washer	26
72		58720	Washer	2
73		58740	Washer	3
74				
75	30146-023	31160	Washer	6
76				
77		57421	Clamp, cushioned	7
78		57441	Clamp, cushioned	3
79		60852	Clamp, umpco	1
80		62662	Cherry Rivet, countersink	12
81		62668	Cherry Rivet, Round Head	16
82		62622	Recepticle, Camloc	6

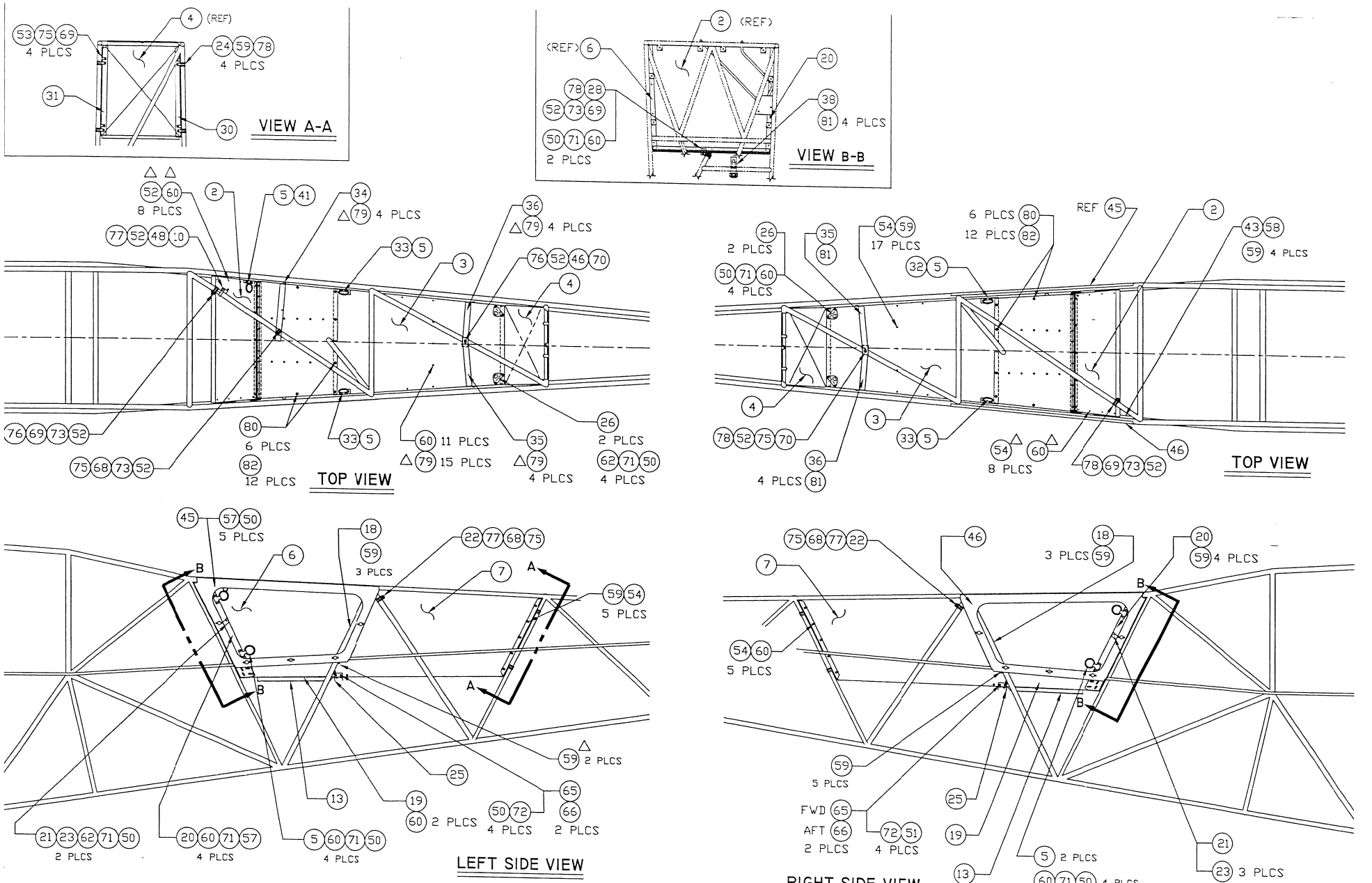

FIGURE 32 – Aft Stowage Compartment Installation