# SERVICE BULLETIN No. 29

**AVIAT AIRCRAFT INC.**

*P.O. Box 1240*
*672 South Washington*
*Afton, WY 83110 USA*
*307-886-3151*
*Fax: 307-885-9674*
*aviat@aviataircraft.com*

**DATE: 7 February 2000**

**REVISION: Orig.**

**AIRCRAFT: PITTS SPECIAL S-2C**

**SUBJECT: Elevator Forward Control Rod**

**Engineering aspects are FAA Approved.**

## 1. EFFECTIVITY

Pitts S-2C: S/N 6001-6033 inclusive.

## 2. PURPOSE

Elevator forward control rod replacement.

## 3. BACKGROUND

Aviat has determined that failure of either or both of the bearings in the elevator forward control rod could result in a control system lockup disabling both the elevator and aileron controls resulting in loss of aircraft control. New bearings have been selected to eliminate the failure hazard.

## 4. COMPLIANCE

**MANDATORY and PRIOR TO FURTHER FLIGHT.**

The current 2-5700-002 elevator control rod assembly and MS21151/5 rod end bearings are to be removed and replaced with the Pitts S-2B 2-5200-021 elevator control rod assembly with SAE-AS81935/2 rod end bearings.

Compliance with this service bulletin is required prior to further flight of the aircraft. If service facilities are not available at the aircraft's location, the aircraft may be flown to a location where the instructions contained in this service bulletin may be completed. NO ACROBATIC MANEUVERS ARE PERMITTED PRIOR TO COMPLIANCE WITH THIS SERVICE BULLETIN.

## 5. INSTALLATION INSTRUCTIONS

**NOTES:** Refer to Appendix A of this Service Bulletin for parts list.
See figures in Appendix B of this Service Bulletin for additional information.

**A. Removal.**

1. Remove belly panels for access.
2. Unbolt and remove elevator control rod assembly between aft control stick and idler arm (See Figure B.1).
   NOTE: DO NOT DISASSEMBLE CONTROL ROD. Keep control rod intact for reference. (Figure B.4)
3. Discard bolts, nuts and washers.

**B. Adjustment.**

1. Adjust rod ends of new assembly to match length between bearing centers of old assembly. Ensure threads are visible through inspection hole in bearing shanks. Balance the threads visible on each end of rod. (Figure B.4)
2. Line up rod ends so that the outer housings lie in the same plane and are parallel. Secure with AN316-5 check nuts. (Figure B.4)
3. See FAA AC43.13-1B Chapter 7 Section 4 for fastener installation information.

**C. Installation.**

1. Install the forward end of the control rod into the lower end of the aft control stick. If necessary the ears of the 2-5110-006 control stick flanges may be spread for clearance required to insert AN960-10L washers. (Figure B.2 )
2. Install the aft end of the control rod into the aft hanger using the hardware provided. (Figure B.3)
3. See FAA AC43.13-1B Chapter 7 Sections 3-4 for fastener installation information.

**D. Travel Check.**

1. Check control operation moving control stick to its extreme positions. The elevator control rod should rotate slightly in all positions when twisted by hand. If the control rod binds in an extreme position check alignment of control rod bearings (see step B.2 above) and adjust as necessary.
2. Verify elevator control surface travel in accordance with the Pitts Special S-2C Aircraft Maintenance Manual (27°±0.75° up and 27°±0.75° down).

**E. Completion.**

1. Check all connections for proper fit and safety.
2. Reinstall belly panels.
3. Make aircraft log entry to note maintenance performed referencing this Service Bulletin.
4. Prior to return to service perform the requirements of FAR 91.407(b) including test flight of the aircraft to verify proper control system operation, operational check of maintenance and log of the flight in the aircraft records.
5. Complete the Compliance Letter in Appendix C of this Service Bulletin and return to Aviat Aircraft and the FAA-Denver ACO.

## 6. ADDITIONAL INSTRUCTIONS

### A. Weight and balance

No changes.

### B. Airplane flight manual

No changes.

### C. Repetitive Inspections

None required.

### E. Continuing Maintenance

Refer to the Pitts Special S-2C Aircraft Maintenance Manual.
(Aviat PN 70206-001).

**Appendix A**
**Parts List**

| | Part Number | Qty | Description | Notes |
|---|---|---|---|---|
| Remove | 2-5700-002 | 1 | Control Rod Assy. | |
| | 2-2780-210 | 2 | Rod End Bearing | MS21151/5 |
| | 2-2780-157 | 2 | Checknut | AN316-6L |
| | 2-2780-126 | 1 | Bolt | AN3-7A |
| | 2-2780-131 | 1 | Bolt | AN3-11A |
| | 2-2780-162 | 2 | Self-Locking Nut | AN365-1032C |
| | 2-2780-202 | 5 | Washer | AN960-10 |
| Install | 2-5200-021 | 1 | Control Rod Assy. | |
| | 2-2780-230 | 2 | Rod End Bearing | Aurora ASW-3T<br>or SAE-AS81935 equivalent |
| | 2-2780-231 | 2 | Checknut - New | AN316-5 |
| | 2-2780-126 | 1 | Bolt - New | AN3-7A |
| | 2-2780-131 | 1 | Bolt - New | AN3-11A |
| | 2-2780-162 | 2 | Self-Locking Nut - New | AN365-1032C |
| | 2-2780-202 | 5 | Washer - New | AN960-10 |
| | 2-2780-203 | 2 | Washer - New | AN960-10L |

NOTICE
Parts listed for installation will be provided by Aviat Aircraft Inc.

## Appendix B
## Illustrations

Figure B.1
Elevator Control System

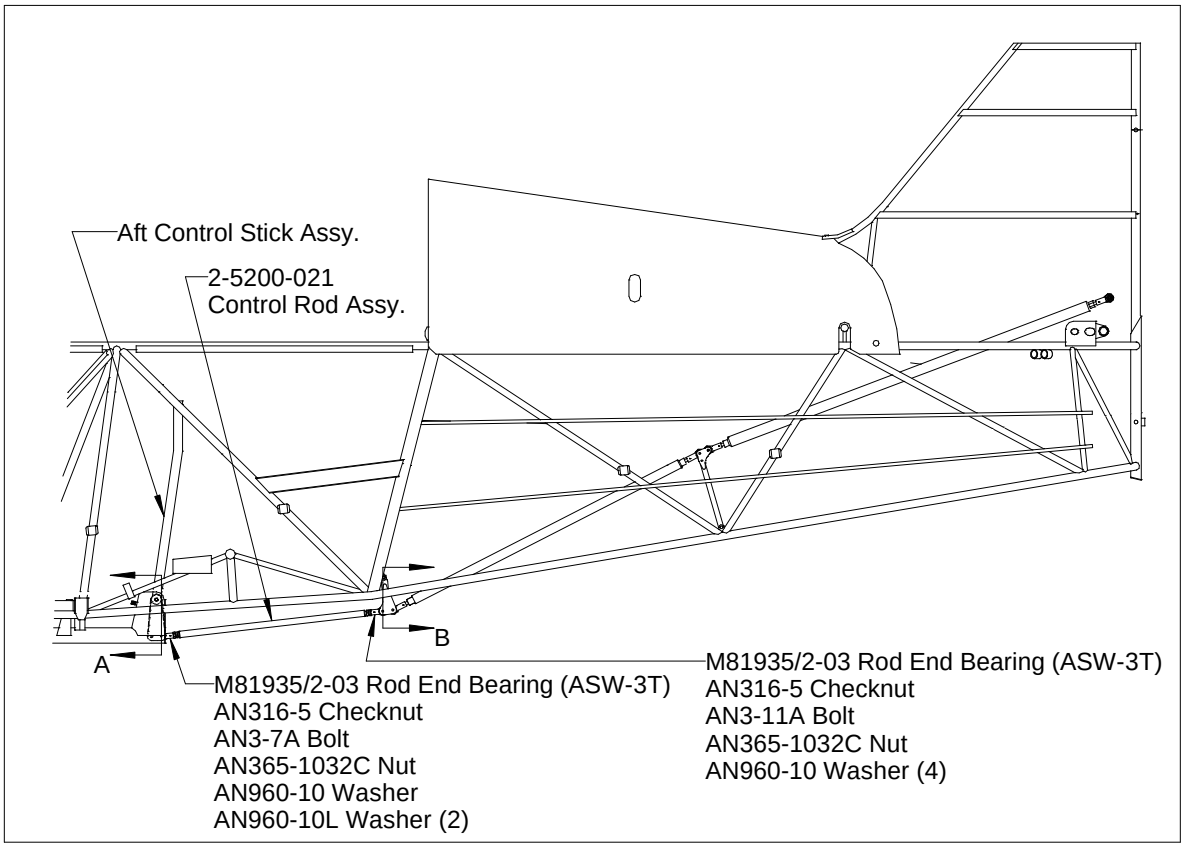


Figure B.2
View A - Bearing Installation - Fwd

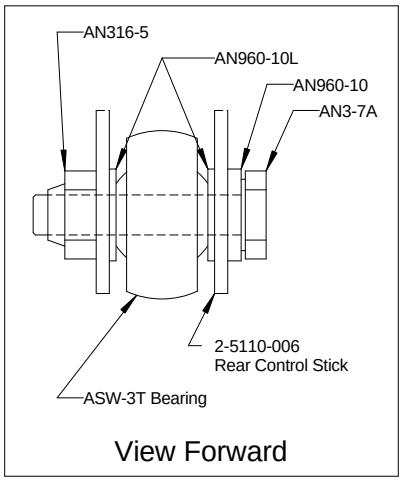


Figure B.3
View B - Bearing Installation - Aft

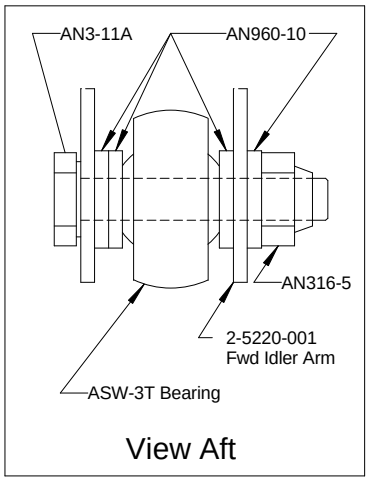

**Appendix B**
**Illustrations**

Figure B.4
Control Rod Assembly

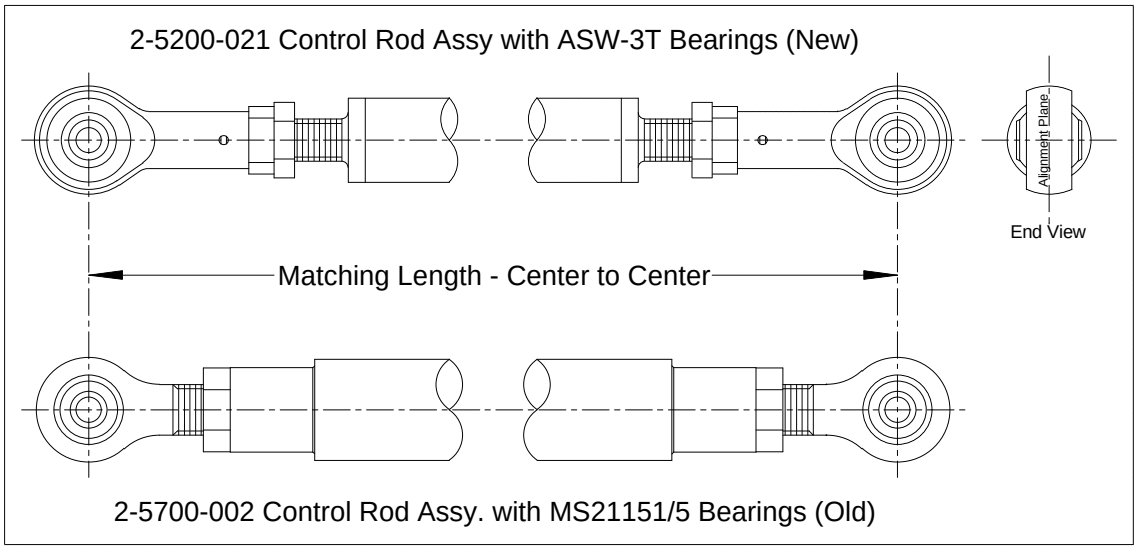

## Appendix C
## COMPLIANCE LETTER

This is to certify that I have replaced the elevator forward control rod assembly in accordance with Aviat Service Bulletin 29.

Pitts S-2C Serial Number: _____

Registration Number: _____

Date work completed: _____

Aircraft Total Time: _____

Signed By: _____

Title: _____

Return one copy to: Chief Engineer
Aviat Aircraft Inc.
P.O. Box 1240
Afton, WY 83110

Fax # (307) 885-9674

and second copy to: Federal Aviation Administration
Denver ACO
26805 East 68th Avenue, Room 214
Denver, CO 80249-6361

Fax # (303) 342-1088